NYFEA

www.nyfea.com

Nyfea product specification

PRODUCT SPECIFICATION

Customer: _____

Product Name: Temperature and Humidity Sensor

Part NO: FHT41

Issue Date: _____

Prepared	Checked	Customer Check
ChenTT	Zelig	

NYFEA

1 Features

- Relative humidity accuracy: up to ±1.8%RH
- Temperature accuracy: up to ±0.2 °C
- Supply voltage: 1.6 V to 5.5 V
- Average current: 0.4 μA (at meas. rate 1 Hz)
- Idle current: 0.1uA
- Resolution: 0.01%RH, 0.01℃
- Operating range: 0-100%RH, -40~125 °C
- Communication Interface: I²C, up to 1 MHz, with 2 I²C addresses
- Variable power heater
- NIST traceability
- JEDEC JESD47 qualification

Package Information：

PRODUCTS	PACK	DETAILS
FHT41	DFN4	High precision, seeFig2, addr:0x44

2 Applications

- Automotive cabin
- Industrial control
- Smart home
- Consumer electronics
- Medical devices

3 Description

FHT41 is a new-generation single-chip integrated temperature and humidity sensor of NYFEA, which can offer configurable I²C addresses. The built-in heater can be activated in anti-dew occasions, and the heater power is configurable. The four-pin dual-flat-no-leads package is suitable for surface mount technology (SMT) processing.

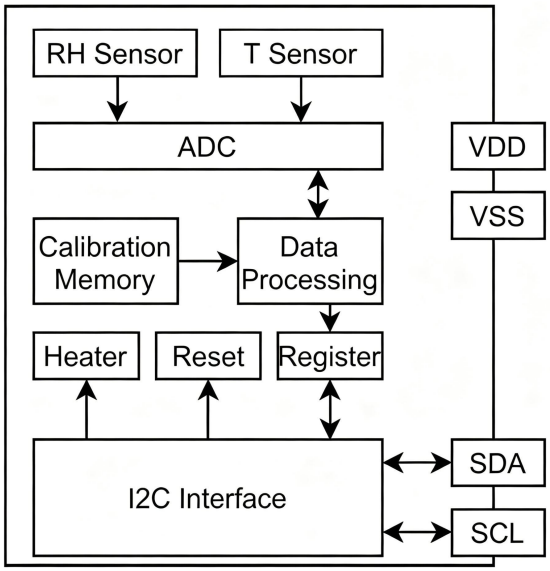

Functional Block Diagram of FHT41 Family

NYFEA

Table of Contents

1 Features 2

2 Applications 2

3 Description 2

4 Pin configuration and function 4

5 Specifications 4

5.1 Absolute Maximum Ratings.....4

5.2 Electrostatic Protection.....4

5.3 Electrical Characteristics 5

5.4 Timings 5

5.5 Specifications 6

6 Sensor Operation 9

6.1 I2C Communication.....9

6.2 Data type & length 8

6.3 Checksum Calculation.....10

6.4 Command Overview 10

6.5 Conversion of Signal Output 11

6.6 Serial Number..... 11

6.7 Reset & Abort 11

6.8 Heater Operation 11

6.9 Typical application circuit..... 12

7 Package Information 13

7.1 DFN4 package outline (1.5mm×1.5mm) 13

7.2 Land Pattern 14

7.3 Reel and Tape Information 14

7.4 Marking Information..... 15

8 Ordering Information 15

9 Important Notices 16

4 Pin Configuration and Functions

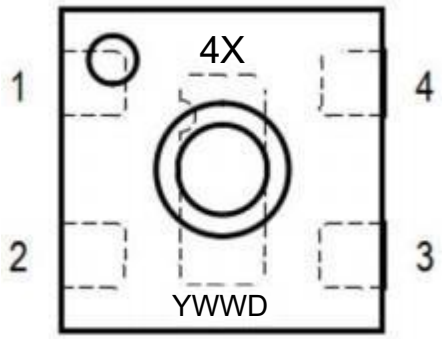

Figure 1 Top View of FHT41

Table 1 Pin Function of FHT41

PIN NUMBER	NAME	DESCRIPTION
1	SDA	I²C Data pin; input / output.
2	SCL	I²C Serial clock; input
3	VDD	Supply voltage
4	VSS	Ground.

5 Specifications

5.1 Absolute Maximum Ratings

Table 2 Absolute Maximum Ratings of FHT41 family

	MIN	MAX	UNIT
ALERT Pin Voltage	- 0.5	6	V
Operating Conditions	- 40	125	˚C
Junction Temperature		150	˚C
Storage Temperature	- 40	150	˚C

Unless otherwise noted, the specifications in the above table apply within the atmospheric temperature range. Stresses beyond the range may cause permanent damage to the device.

5.2 Electrostatic Protection

Table 3 Electrostatic Protection Capability

		VALUE	UNIT
Electrostatic Discharge	Human Body Mode (HBM), per ANSI/ESDA/JEDEC JS-001	±7000	V
Latch-up effect	Latch-Up, per JESD 78, Class IA	±200	mA

5.3 Electrical Characteristics

Unless otherwise specified, the following data are the characteristics of the chip in the temperature ranges from -40℃ to +125℃ and the power supply voltage ranges from 1.6V to 5.5V. (Typical operating conditions are +25℃ and 3.3V).

Table 4 Electrical Characteristics of FHT41 family

PARAMETER	SYMBOL	CONDITIONS	MIN	TYP	MAX	UNIT
Supply voltage	V_{DD}		1.6	3.3	5.5	V
Power up/down level	V_{POR}		0.8		1.0	V
Supply slew rate	$V_{DD,slew}$				20	V/ms
Supply current	I_{DD}	Idle state	0.08	0.1	0.15	uA
		Measurement		300	500	uA
		Aver., high repeatability		2		uA
		Aver., med.repeatability		1.2		uA
		Aver., low.repeatability		0.4		uA
Low level input voltage	V_{IL}		0		$0.3*V_{DD}$	V
High level input voltage	V_{IH}		$0.7*V_{DD}$		V_{DD}	V
Pull up resistors	R_P		390			Ω
Cap bus load	C_b				400	pF

5.4 Timings

Table 5 System Timing Specifications

PARAMETER	SYMBOL	CONDITIONS	MIN	TYP	MAX	UNIT
Power-up time	t_{PU}	After hard reset, $V_{DD}>V_{POR}$		0.3	1	ms
Soft reset time	t_{SR}	After soft reset			1	ms
Measurement duration	$t_{MEAS,L}$	Low repeatability		1.3	1.6	ms
	$t_{MEAS,M}$	Medium repeatability		3.7	4.5	ms
	$t_{MEAS.H}$	High repeatability		6.9	8.3	ms
Heater-on duration	t_{Heater}	Long pulse	0.9	1	1.1	s
		Short pulse	0.9	1	1.1	s

Note: Max. values are measured at 1.6 V supply voltage.

5.5 Specifications

5.5.1 Relative Humidity

Table 6 General Relative Humidity Sensor Specifications.

PARAMETER	CONDITIONS	VALUE	UNIT
FHT41 RH accuracy	typ.	±1.8	%RH
	max.	see Fig.2	%RH
Repeatability	high	0.08	%RH
	medium	0.15	%RH
	low	0.25	%RH
Resolution		0.01	%RH
Hysteresis	@25˚C	±0.8	%RH
Specified range		0-100	%RH
Response time	$t_{63\%}$	4	s
Long-term drift	typ.	<0.3	%RH/y

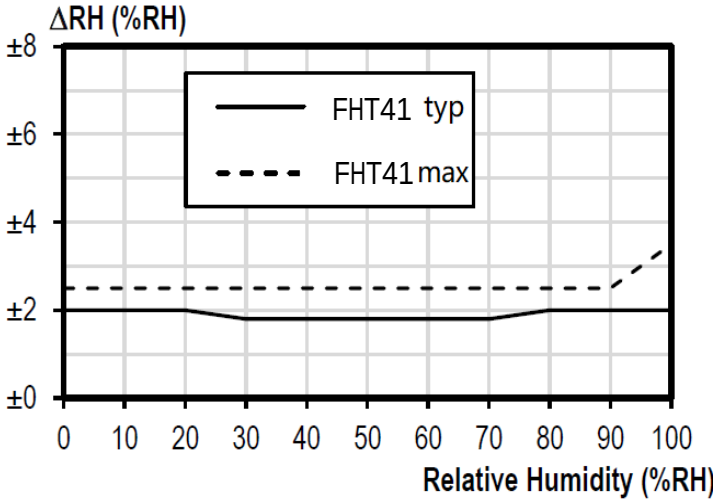

Figure 2 FHT41 RH accuracy @25˚C

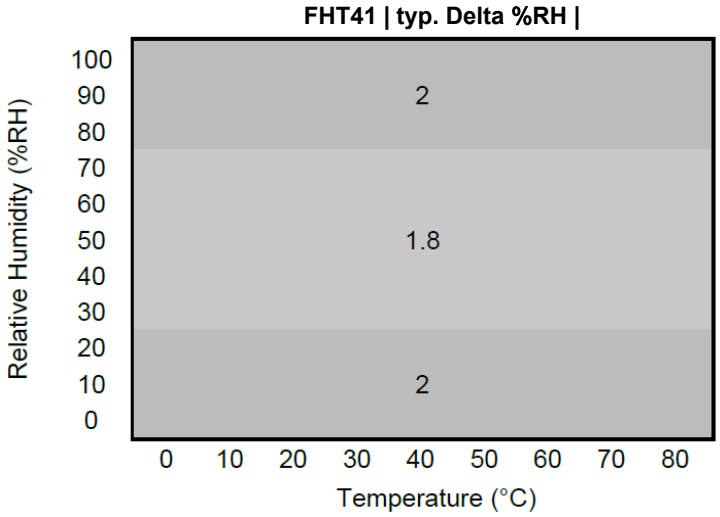

Figure 3 Typical RH accuracy tolerance over humidity and temperature for FHT41.

5.5.2 Temperature

Table 7 General temperature sensor specifications.

PARAMETER	CONDITIONS	VALUE	UNIT
FHT41 T. accuracy	typ.	±0.2	˚C
	max.	seeFig.4	˚C
Repeatability	high	0.04	˚C
	medium	0.07	˚C
	low	0.1	˚C
Resolution		0.01	˚C
Specified range		-40 ~ 125	˚C
Response time	t63%	2	s
Long-term drift	typ.	<0.03	˚C / y

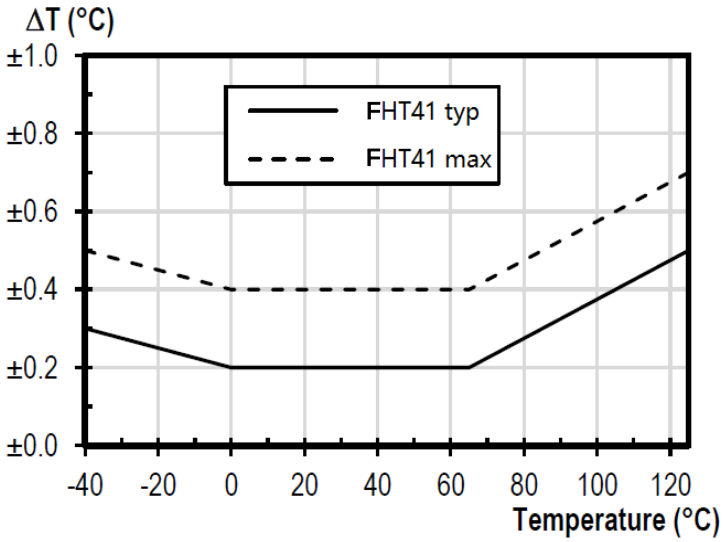

Figure 4 FHT41 emperature accuracy

6 Sensor Operation

6.1 I²C Communication

I²C communication is based on NXP's I²C-bus specification and user manual UM10204 [3]. Supported I²C modes are standard, fast mode, and fast mode plus. Data is transferred in multiples of 16-bit words. In order to increase reliability of data transfer, I²C glitch protection is offered in form of 8-bit checksum (cyclic redundancy check = CRC). All transfers must begin with a start condition (S) and terminate with a stop condition (P). To finish a read transfer, send not acknowledge (NACK) and stop condition (P). Addressing a specific slave device is done by sending its 7-bit I²C address followed by an eighth bit, denoting the communication direction: "zero" indicates transmission to the slave, i.e. "write", a "one" indicates a "read" request. The sensor does not support clock-stretching. In case the sensor receives a read header and if the conversion remains unfinished, it will return a NACK. Measurement data can only be received once and will be deleted from the sensor's register after the first acknowledged I²C read header.

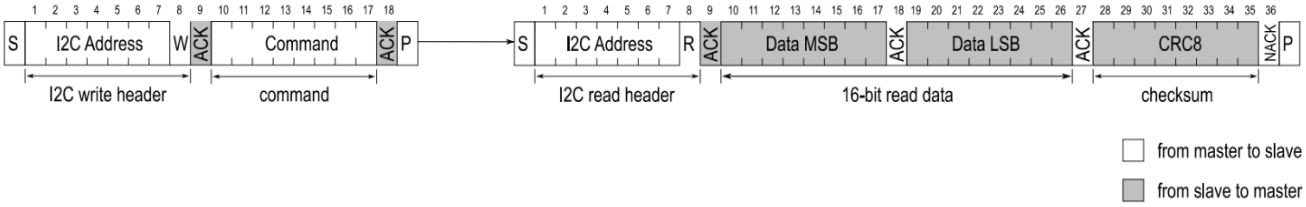

Figure 5 Typical I²C communication timing of FHT41

As shown in Figure 5, this is the typical I²C communication timing for the FHT41 series. First a write header is sent to the I²C slave, followed by a command, for example "measure RH&T with highest precision". After the measurement is finished, the read request directed to this I²C slave will be acknowledged and transmission of data will be started by the slave.

All details on the timing are following the interface specification of NXP's user manual UM10204 Rev.6,4 April 2014. Please follow mandatory capacitor and resistor requirements given in Table 4.

6.2 Data type & length

I²C bus operates with 8-bit data packages. Information from the sensor to the master has a checksum after every second 8-bit data package. Humidity and temperature data will always be transmitted in the following way: The first value is the temperature signal (2 * 8-bit data + 8-bit CRC), the second is the humidity signal (2 * 8-bit data + 8-bit CRC)

6.3 Checksum Calculation

For read transfers each 16-bit data is followed by a checksum with the following properties.

Table 8 Data checksum properties

PROPERTY	VALUE
Name	CRC-8
Message Length	16 bit
Polynomial	0x31($X^8+X^5+X^4+1$)
Initialization	0xFF
Reflect Input/Output false/false	false / false
Final XOR	0x00
Examples	CRC(0xBEEF) = 0x92

6.4 Command Overview

Table 9 Instructions for Function Commands of FHT41

COMMAND (HEX)	RETURNED BYTES	DESCRIPTION [return values]
0xFD	6	measure T & RH with high repeatability [2 byte T-data + 1 byte CRC + 2 byte RH-data + 1 byte CRC]
0xF6 0	6	measure T & RH with medium repeatability [2 byte T-data + 1 byte CRC + 2 byte RH-data + 1 byte CRC]
0xE0	6	measure T & RH with lowest repeatability [2 byte T-data + 1 byte CRC + 2 byte RH-data + 1 byte CRC]
0x89	6	read serial number [2 byte data + 1 byte CRC + 2 byte data + 1 byte CRC]
0x94	-	soft reset [ACK]
0x39	6	activate heater with 200mW for 1s, including a high precision measurement just before deactivation
0x32	6	activate heater with 200mW for 0.1s, including a high precision measurement just before deactivation
0x2F	6	activate heater with 110mW for 1s, including a high precision measurement just before deactivation
0x24	6	activate heater with 110mW for 0.1s including a high precision measurement just before deactivation
0x1E	6	activate heater with 20mW for 1s including a high precision measurement just before deactivation
0x15	6	activate heater with 20mW for 0.1s including a high precision measurement just before deactivation

Note：If the sensor is not ready to process a command e.g. because it is still measuring, it will response with NACK to the I²C read header. Given heater power values are typical and valid for VDD=3.3 V.

6.5 Conversion of Signal Output

The digital sensor signals correspond to following humidity and temperature values:

$$RH = \left(-6 + 125 \cdot \frac{S_{RH}}{2^{16}-1}\right) \%RH \quad (1)$$

$$T = \left(-45 + 175 \cdot \frac{S_T}{2^{16}-1}\right) °C \quad (2)$$

$$T = \left(-49 + 315 \cdot \frac{S_T}{2^{16}-1}\right) °F \quad (3)$$

The RH conversion formula (1) allows values to be reported which are outside of the range of 0%RH to 100%RH. Relative humidity values which are smaller than 0 %RH and larger than 100 %RH are non-physical, however, these “uncropped” values might be found beneficial in some cases (e.g. when the distribution of the sensors at the measurement boundaries are of interest). For all users who do not want to engage in evaluation of these non-physical values, cropping of the RH signal to the range of 0 %RH to 100 %RH is advised.

6.6 Serial Number

Each sensor has a unique serial number, that is assigned with specific rules during production. It is stored in the OTP (one-time-programmable) memory and cannot be manipulated after production. The serial number is accessible via I²C command 0x89 and is transmitted as two 16-bit words, each followed by an 8-bit CRC.

6.7 Reset & Abort

A reset of the sensor can be achieved in three ways:

1. Soft reset: send the reset command described in Table 9.
2. I²C general call reset: all devices on I²C bus are reset by sending the command 0x06 to the I²C address 0x00.
3. Power down (incl. pulling SCL and SDA low).

Any command that triggers an action at the sensor can be aborted via I²C general call reset or soft reset.

6.8 Heater Operation

The sensor incorporates an integrated on-chip heater which can be switched on by the set of different commands. Three heating powers and two heating durations are selectable. After reception of a heater-on command, the sensor executes the following procedure:

1. The heater is enabled and the timer starts its count-down;
2. On timer expiration a temperature and humidity measurement with the highest repeatability is started, the heater remains enabled;
3. After the measurement is finished the heater is turned off;

4. Temperature and humidity values are now available for readout.

The maximum on-time of the heater commands is one second in order to prevent overheating of the sensor by unintended usage of the heater. In cases where periodic heating is required, it is necessary to ensure that the duty cycle of the heater's on and off times is less than 10%.

Possible Heater Use Cases:

1. Removal of condensed / spray water on the sensor surface. Although condensed water is not a reliability / quality problem to the sensor, it will however make the sensor non-responsive to RH changes in the air as long as there is liquid water on the surface.

2. Creep-free operation in high humid environments. Periodic heating pulses allow for creep-free high-humidity measurements for extended times.

Important notes for operating the heater:

1. The heater is designed for a maximum duty cycle of 10%, meaning the total heater-on-time should not be longer than 10% of the sensor's lifetime.

2. During operation of the heater, sensor specifications are not valid.

3. The temperature sensor can additionally be affected by the thermally induced mechanical stress, offsetting the temperature reading from the actual temperature.

4. The sensor's temperature (base temperature + temperature increase from heater) must not exceed T_{max} = 125 °C in order to have proper electrical functionality of the chip.

5. The heater draws a large amount of current once enabled (up to 70 mA in the highest power setting). Although a dedicated circuitry draws this current smoothly, the power supply must be strong enough to avoid large voltage drops that could provoke a sensor reset.

6. If higher heating temperatures are desired, consecutive heating commands must be sent to the sensor. The heater shall only be operated in ambient temperatures below 65 °C or else it could drive the sensor outside of its maximal operating temperature (125℃).

6.9 Typical application circuit

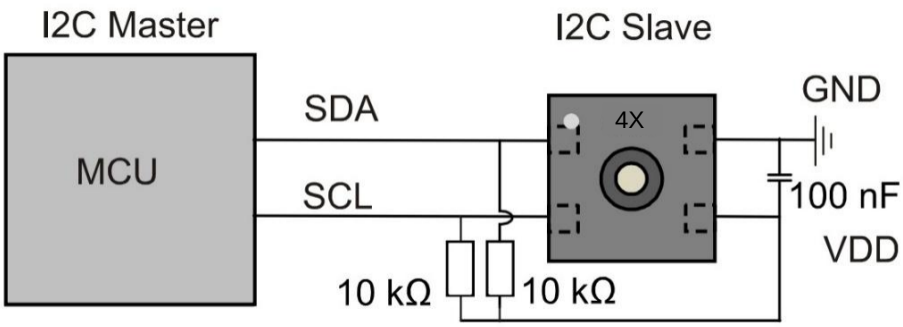

Figure 6 Typical application circuit reference diagram of FHT41

7 Package Information

7.1 DFN4 package outline (1.5mm×1.5mm)

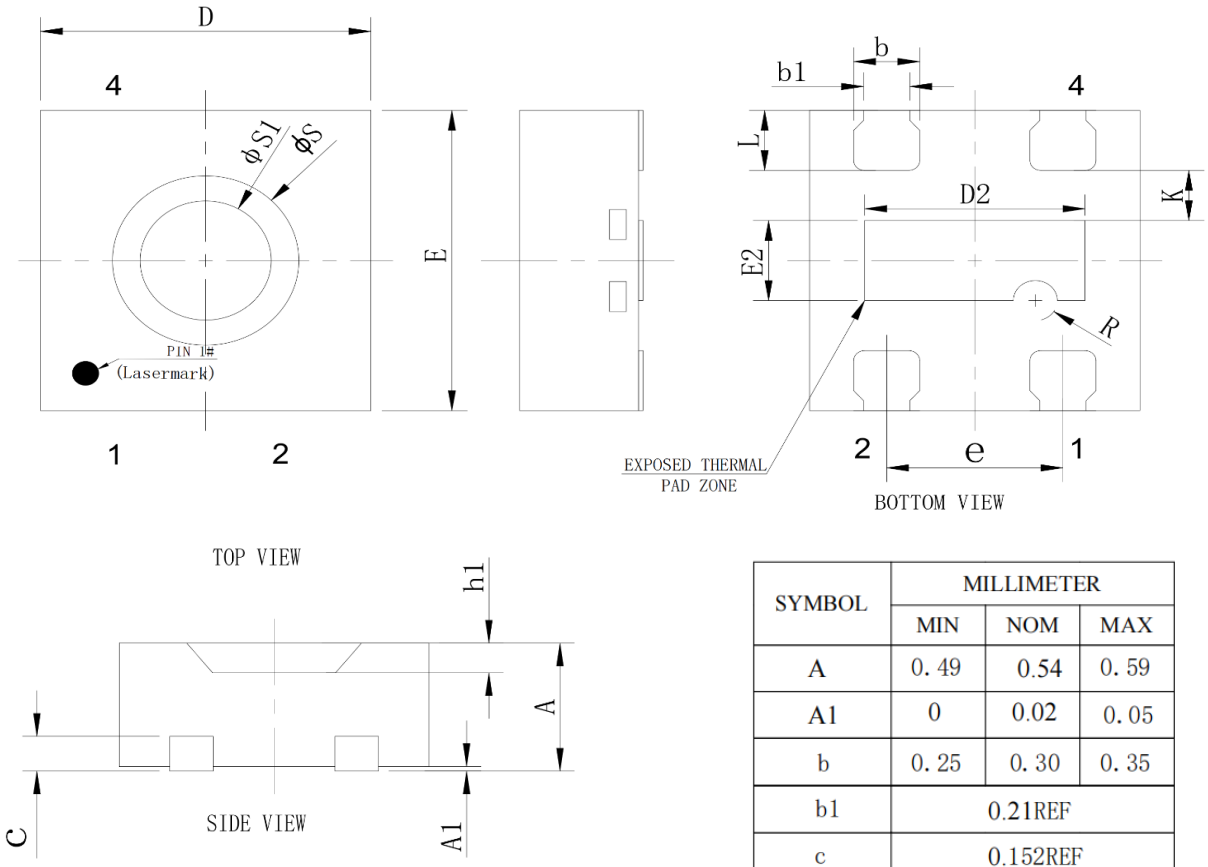

SYMBOL	MILLIMETER		
	MIN	NOM	MAX
A	0. 49	0.54	0. 59
A1	0	0.02	0. 05
b	0. 25	0. 30	0. 35
b1	0.21REF		
c	0.152REF		
D	1. 45	1. 50	1. 55
D2	0. 90	1. 00	1. 10
E	1. 45	1. 50	1. 55
E2	0. 30	0. 40	0. 50
e	0. 80BSC		
K	0. 25REF		
L	0. 25	0. 30	0. 35
R	0. 10REF		
∅S	0. 60BSC		
∅S1	0. 50BSC		
h1	-	0. 13	-

Figure 7 Dimensional drawing of FHT41 (in mm)

7.2 Land Pattern

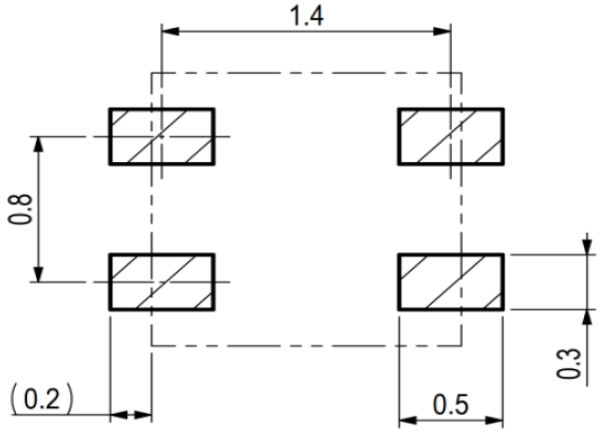

Figure 8 Recommended land pattern (in mm)

7.3 Reel and Tape Information

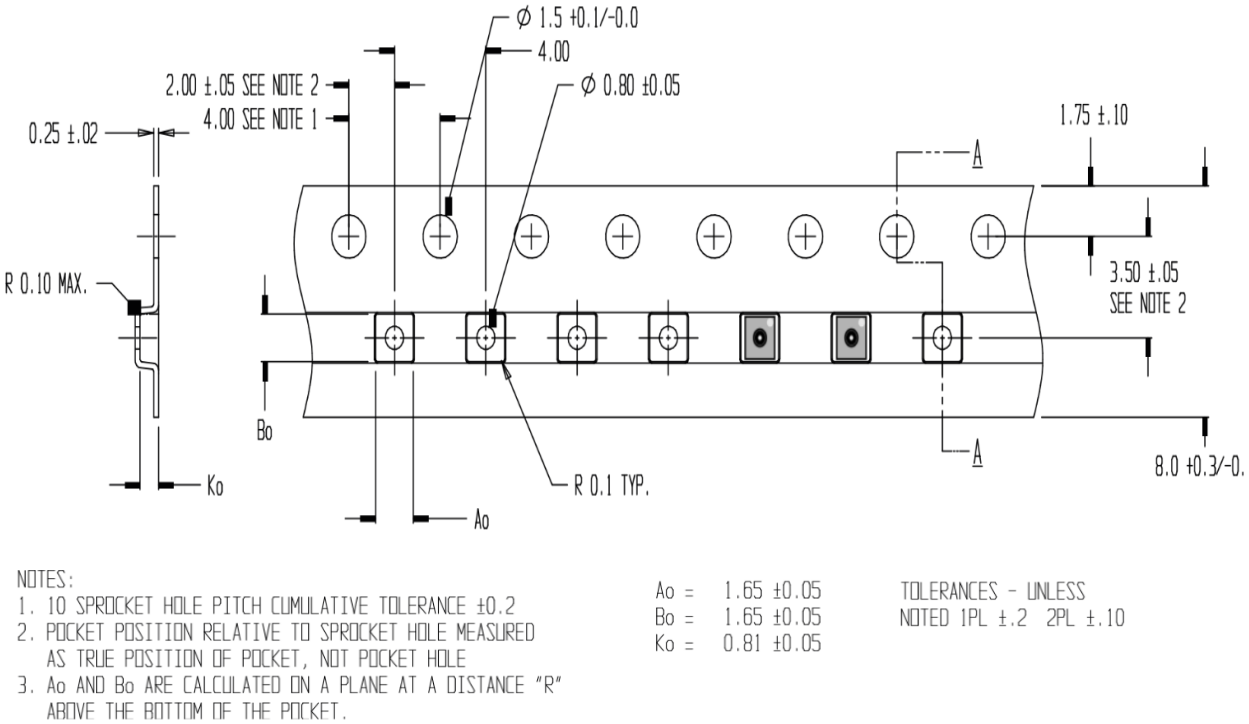

Note: The diameter of the reel for the single-disc 10K is 13 inches, and that for the 2K is 7 inches.

Figure 9 Reel and Tape Information

7.4 Marking Information

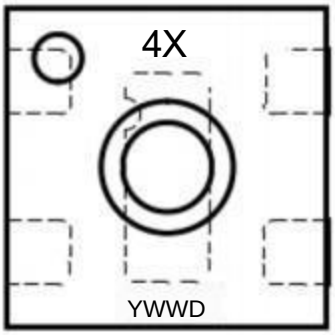

4X: indicates the model FHT4X, where X is a number 0/1/5. For example, 41 indicates the model FHT41.

YWWD : Y is the year, W W is the week, D is the internal version number. For example, 5066 indicates production in the 6th week of 2025, version 6.

8 Ordering Information

ORDER NUMBER	DEVICE	PACKAGE	SPQ	NOTE
FHT41-TR	FHT41	DFN-4	2000	High precision, addr:0x44, Tape & Reel

9 Important Notices

（1）ESD Precautions

The inherent design of this part makes it very sensitive to electrostatic discharge (ESD). To prevent damage or degradation caused by electrostatic discharge, operate the sensor in an Electrostatic Protected Area (EPA) and take proper measures (operator should be grounded by wrist strap, and all non-insulated or conductive objects should be grounded).

（2）Exposure to Chemicals

The temperature and humidity sensors of NYFEA are high-sensitivity environmental sensor, not ordinary electronic components. The sensors should not be in close contact with volatile chemicals, such as chemical solvents or organic compounds, especially high concentrations and prolonged exposure are more dangerous. (Ethyl)ketene, acetone, isopropanol, ethanol, toluene, etc., have been shown to cause a shift in humidity readings that is irreversible in most cases.

（3）Applications in Extreme Environments

Some applications require the temperature and humidity sensor to be exposed to harsh environments. In many cases, the suitability of the sensor is not considered. There are some situations that require special attention.

a) The sensor needs to return to the normal environment to recover for a period of time after working under abnormal temperature and humidity conditions (> 90).

b) In some application environments, the sensor may be exposed to a high concentration of volatile organic solvents for a long time, which may occur in both the assembly process and the application process. Such applications require attention.

c) In some application environments, the sensor may be exposed to an acidic or alkaline environment, but only a certain concentration will cause harm to the sensor. For bases, pH > 9 will cause damage to the sensor. Etching materials, such as H_2O_2, NH_3, etc., can also harm the sensor in high concentrations.

d) There may be corrosive gases in some application environments. If the concentration is relatively low, it will not affect the sensor, but it will affect the connection of the solder joints. Higher concentrations can also cause damage to the sensor.

（4）Packaging and Storage

Before use, it is strongly recommended to store the sensor in its original packaging in the following environment: temperature 10 °C ~ 50 °C (0 °C - 125 °C for a limited time), 20% ~ 65% RH.

（5）Assemblage

The sensor can be stored for 1 year in normal storage environment, and the sensor has a moisture resistance level of 1.