Description

The LIS2DH12TR is a small form factor, integrated digital output 3-axis accelerometer with a feature set optimized for cell phones and consumer product motion sensing. Applications include user interface control, gaming motion input, electronic compass tilt compensation for cell phones, game controllers, remote controls and portable media products.

The LIS2DH12TR features a dedicated motion block which implements algorithms to support “any motion” and shake detection, tilt/flip and tilt 35 position detection.

Low power consumption and small size are inherent in the monolithic fabrication approach, where the MEMS accelerometer is integrated in a single-chip with the electronics integrated circuit.

In the LIS2DH12TR the internal sample rate can be set from 0.5 to 2000 samples / second. The device supports the reading of sample and event status via polling or interrupts.

Features

- ±2, ±4, ±8, ±12, ±16g range
- 16-bit single sample resolution
- 16-bit resolution with FIFO
- 0.5 to 2000 Hz Output Data Rate
- 4 μA typical Standby current
- Low typical active current
- SPI, up to 10 MHz
- I2C interface, up to 1 MHz
- 2×2×0.92 mm 12-pin LGA package
- High reliability thru single-chip 3D silicon MEMS technology
- RoHS compliant

Applications

- Smartphone
- Wearable
- Vibration in Cell phone
- VR & game controllers

1 Order Information 5
2 Functional Block Diagram 6
3 Packaging and Pin Description 7
3.1 Package Outline 7
3.2 Package Orientation 8
3.3 Pin Description 9
3.4 Typical Application Circuits 10
3.5 Tape and Reel 13
3.6 Soldering Profile 15
3.7 Shipping and Handling Guidelines 15
3.8 Moisture Sensitivity Level Control 15
4 Specifications 16
4.1 Absolute Maximum Ratings 16
4.2 Sensor Characteristics 17
4.3 Electrical and Timing Characteristics 18
4.3.1 Electrical Power and Internal Characteristics 18
4.3.2 Electrical Characteristics 19
4.3.3 I2C Timing Characteristics 20
5 General Operation 21
5.1 Sensor Sampling 21
5.2 Offset and Gain Calibration 21
5.3 Reset 21
6 Operational States 22
7 Operational State Flow 23
8 Interrupts 24
8.1 Interrupt Overview 24
8.2 Enabling and Clearing Interrupts 25
8.3 Interrupt Sources 25
8.3.1 ACQ_INT Interrupt 25
8.3.2 TILT/FLIP (TILT_INT, FLIP_INT) 25
8.3.3 Interrupt on AnyMotion (ANYM_INT) 25
8.3.4 Interrupt on SHAKE (SHAKE_INT) 25
8.3.5 Interrupt on TILT_35 (TILT_35_INT) 26

8.3.6 Interrupt on FIFO Empty (FIFO_EMPTY_INT) 26
8.3.7 Interrupt on FIFO Full (FIFO_FULL_INT) 26
8.3.8 Interrupt on FIFO Threshold (FIFO_THRESH_INT) 26
8.4 Interrupt Servicing 27
8.4.1 Global Interrupt Service Mode 27
8.4.2 Bitmask/Individual Interrupt Service Mode 27
8.5 Interrupt Requests and External INT Pins 29
8.5.1 Selecting Drive and Polarity 29
8.5.2 Swapping INT Pins 30
8.5.3 Combining Interrupt Requests 30
9 Sampling 31
9.1 Continuous Sampling 31
9.2 Setting the Sample Rate 31
9.3 Additional Rate Options 32
10 I2C Interface 33
10.1 Physical Interface 33
10.2 Timing 34
10.3 I2C Message Format 34
10.4 I2C Watchdog Timer 35
11 SPI Interface 36
11.1 SPI Physical Interface 36
11.2 SPI Protocol 36
11.3 SPI Register Write Cycle - Single 36
11.4 SPI Register Write Cycle - Burst 36
11.5 SPI Register Read Cycle - Single 37
11.6 SPI Register Read Cycle - Burst 37
11.7 TIMING 38
12 Register Interface 39
12.1 Register Summary 39
12.2 (0x05)Device Status Register 42
12.3 (0x06) Interrupt Enable Register 43
12.4 (0x07) Mode Register 44
12.5 (0x08) Sample Rate Register 45
12.6 (0x09) Motion Control Register 46
12.7 (0x0A) FIFO Status Register 47

12.8 (0x0B) FIFO Read Pointer Register 48
12.9 (0x0C) FIFO Write Pointer Register 49
12.10 (0x0D - 0x12) XOUT, YOUT and ZOUT Data Accelerometer Registers 50
12.11 (0x13) Status Register 51
12.12 (0x14) Interrupt Status Register 52
12.13 (0x18) Chip Identification Register 53
12.14 (0x1C) RESET Control 54
12.15 (0x20) Range and Scale Control Register 55
12.16 (0x21 – 0x22) X-Axis Digital Offset Registers 56
12.17 (0x23 – 0x24) Y-Axis Digital Offset Registers 57
12.18 (0x25 – 0x26) Z-Axis Digital Offset Registers 58
12.19 (0x22 & 0x27) X-Axis Digital Gain Registers 59
12.20 (0x24 & 0x28) Y-Axis Digital Gain Registers 60
12.21 (0x26 & 0x29) Z-Axis Digital Gain Registers 61
12.22 (0x2D) FIFO Control Register 62
12.23 (0x2E) FIFO Threshold Register 64
12.24 (0x2F) FIFO Interrupt Status Register 65
12.25 (0x30) FIFO Control Register2, Sample Rate Register 2 66
12.26 (0x31) Communication Control Register 68
12.27 (0x33) GPIO Control Register 69
12.28 (0x40 – 0x41) Tilt/Flip Threshold Registers 70
12.29 (0x42) Tilt/Flip Debounce Register 71
12.30 (0x43 – 0x44) AnyMotion Threshold Registers 72
12.31 (0x45) AnyMotion Debounce Register 73
12.32 (0x46 – 0x47) Shake Threshold Registers 74
12.33 (0x48 – 0x49) Shake Duration, Peak-to-Peak Registers 75
12.34 (0x4A) Timer Control Register 76
12.35 (0x4B) Read Count Register 77

1 ORDER INFORMATION

Table 1. Order Information

Part Number	Resolution	Order Number	Package	Shipping
LIS2DH12TR	16-bit	LIS2DH12TR	LGA-12	Tape & Reel, 10Ku

Row	Marking
XXYM	Device identifier and date code
CCC	Factory lot code
●	Pin 1 identifier

Table 2. Package Information

2 FUNCTIONAL BLOCK DIAGRAM

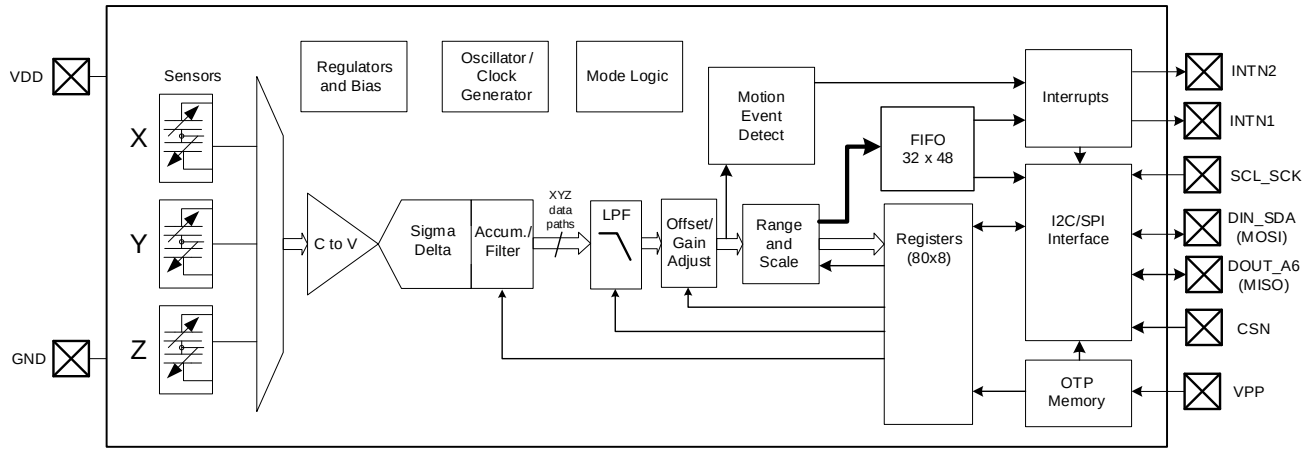

Figure 1. Block Diagram

3 PACKAGING AND PIN DESCRIPTION

3.1 PACKAGE OUTLINE

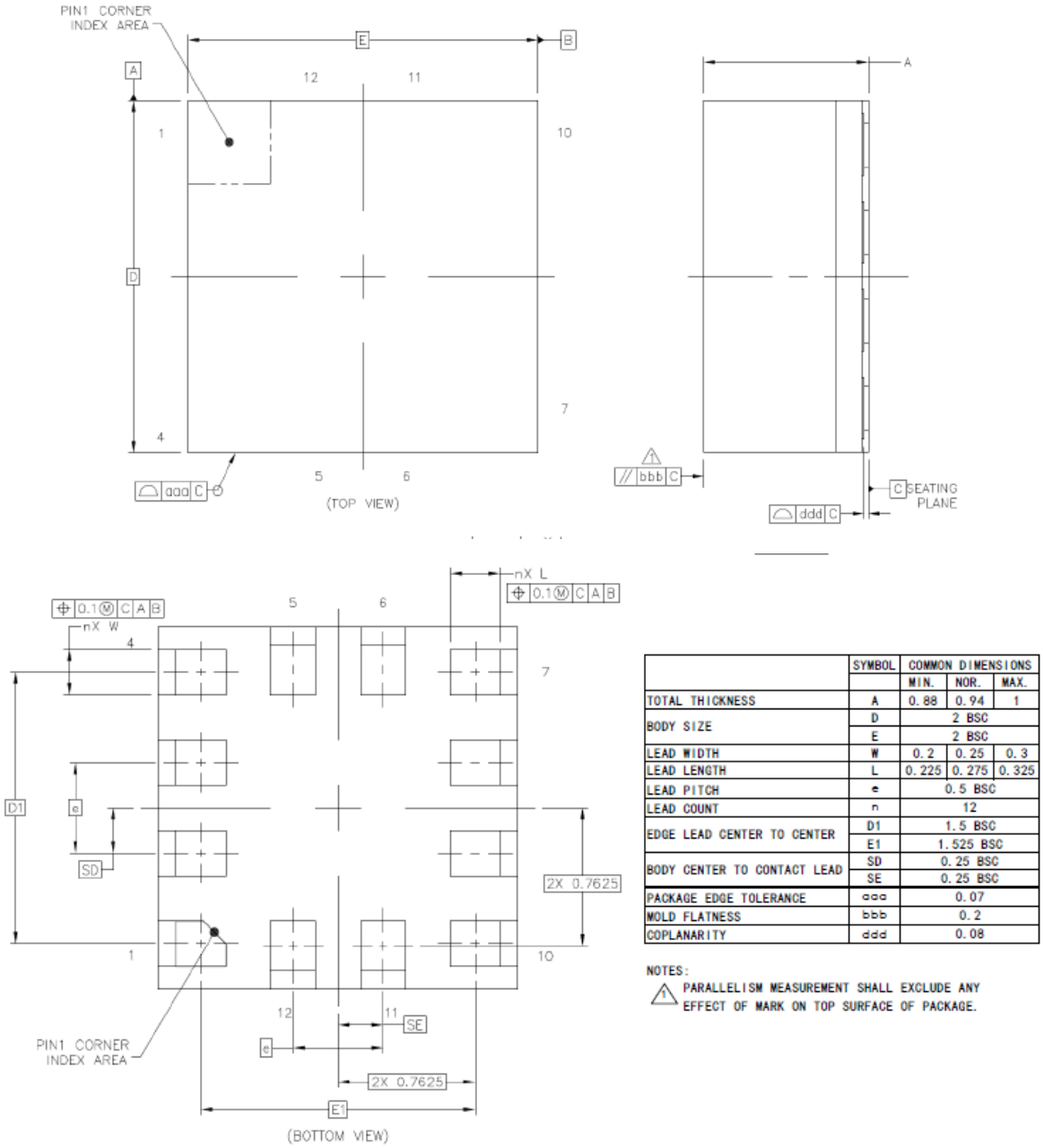

	SYMBOL	COMMON DIMENSIONS		
		MIN.	NOR.	MAX.
TOTAL THICKNESS	A	0.88	0.94	1
BODY SIZE	D	2 BSC		
	E	2 BSC		
LEAD WIDTH	W	0.2	0.25	0.3
LEAD LENGTH	L	0.225	0.275	0.325
LEAD PITCH	e	0.5 BSC		
LEAD COUNT	n	12		
EDGE LEAD CENTER TO CENTER	D1	1.5 BSC		
	E1	1.525 BSC		
BODY CENTER TO CONTACT LEAD	SD	0.25 BSC		
	SE	0.25 BSC		
PACKAGE EDGE TOLERANCE	aaa	0.07		
MOLD FLATNESS	bbb	0.2		
COPLANARITY	ddd	0.08		

NOTES:
1. PARALLELISM MEASUREMENT SHALL EXCLUDE ANY EFFECT OF MARK ON TOP SURFACE OF PACKAGE.

Figure 2. Package Outline and Mechanical Dimensions

3.2 PACKAGE ORIENTATION

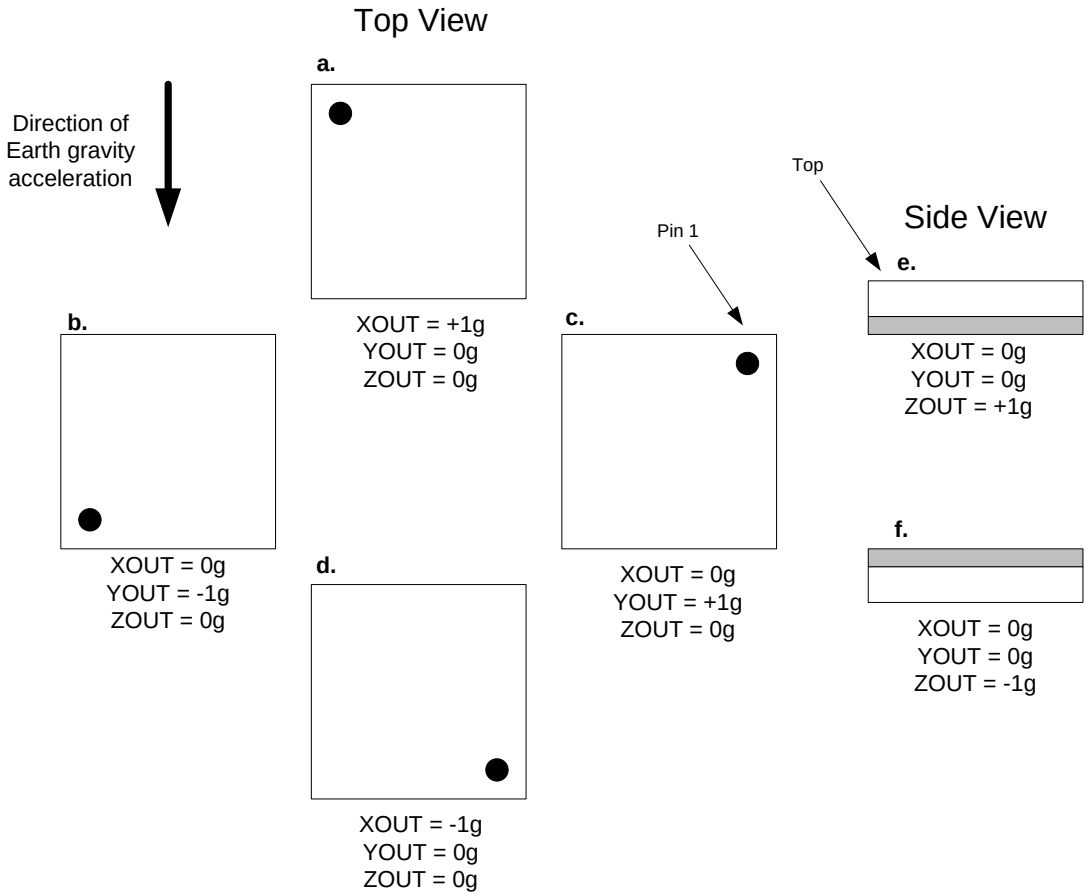

Figure 3. Package Orientation

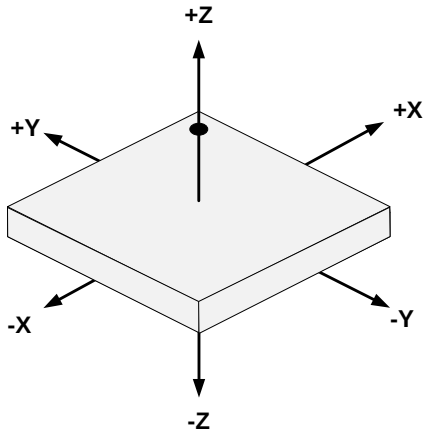

Figure 4. Package Axis Reference

3.3 PIN DESCRIPTION

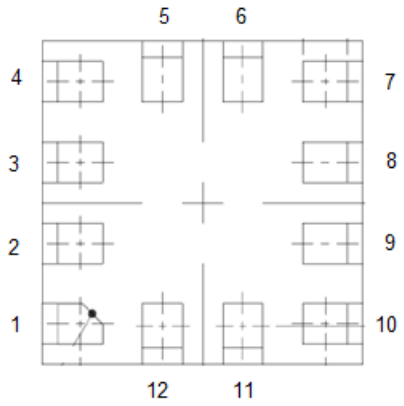

(Bottom View)

Pin	Name	Function
1	SCK_SCL [1]	I2C/SPI serial clock input
2	CSN	SPI chip select (active low) I2C must connect VDD
3	DOUT_A6	SPI data output I2C address bit 6
4	DIN_SDA [1]	SPI data In I2C serial data input/output
5	NC	Internal No Connection
6	GND	Connect to Ground
7	VPP	Connect to Ground
8	NC	Internal No Connection
9	VDD/VDDIO	Power supply for internal and I/O
10	NC	Internal No Connection
11	INTN 2 [2,3]	Interrupt active LOW [3]
12	INTN 1 [2,3]	Interrupt active LOW [3]

Table 3. Pin Description

Notes:

1) This pin requires a pull-up resistor, typically 4.7kΩ to pin VDD. Refer to I2C Specification for Fast-Mode devices. Higher resistance values can be used (typically done to reduce current leakage) but such applications are outside the scope of this datasheet.
2) This pin can be configured by software to operate either as an open-drain output or push-pull output (see GPIO control register, address 0x33). If set to open-drain, then it requires a pull-up resistor, typically 4.7kΩ to VDD.
3) INTN pin polarity is programmable in the GPIO control register, address 0x33.

3.4 TYPICAL APPLICATION CIRCUITS

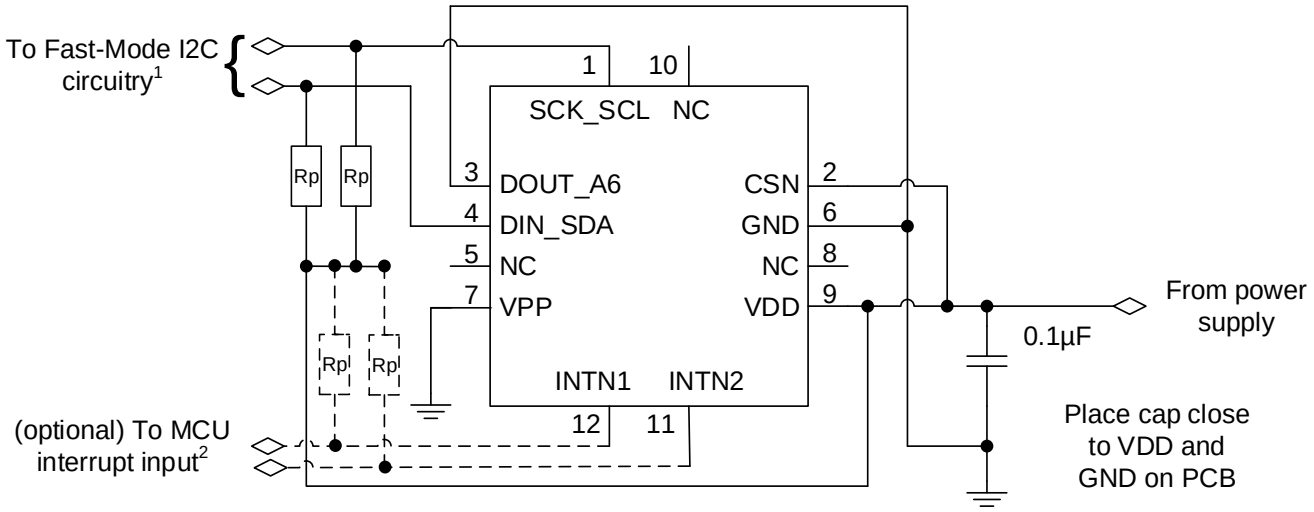

NOTE[1]: Rp are typically 4.7kΩ pullup resistors to VDDIO, per I2C specification. When VDDIO is powered down, DIN_SDA and SCK_SCL will be driven low by internal ESD diodes.

NOTE[2]: Attach typical 4.7kΩ pullup resistor if INTN is defined as open-drain.

Figure 5. Typical I2C Application Circuit

In typical applications, the interface power supply may contain significant noise from external sources and other circuits which should be kept away from the sensor. Therefore, for some applications a lower-noise power supply might be desirable to power the VDD pin.

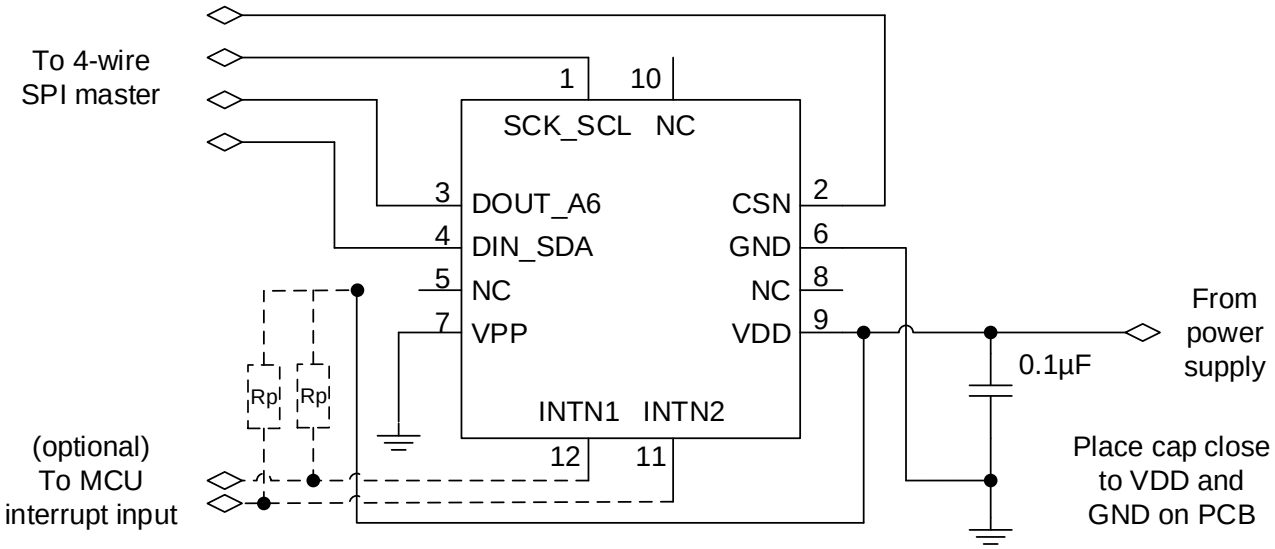

NOTE Rp: Attach typical 4.7kΩ pullup resistor if INTN is defined as open-drain.

Figure 6. Typical 4-wire SPI Application Circuit

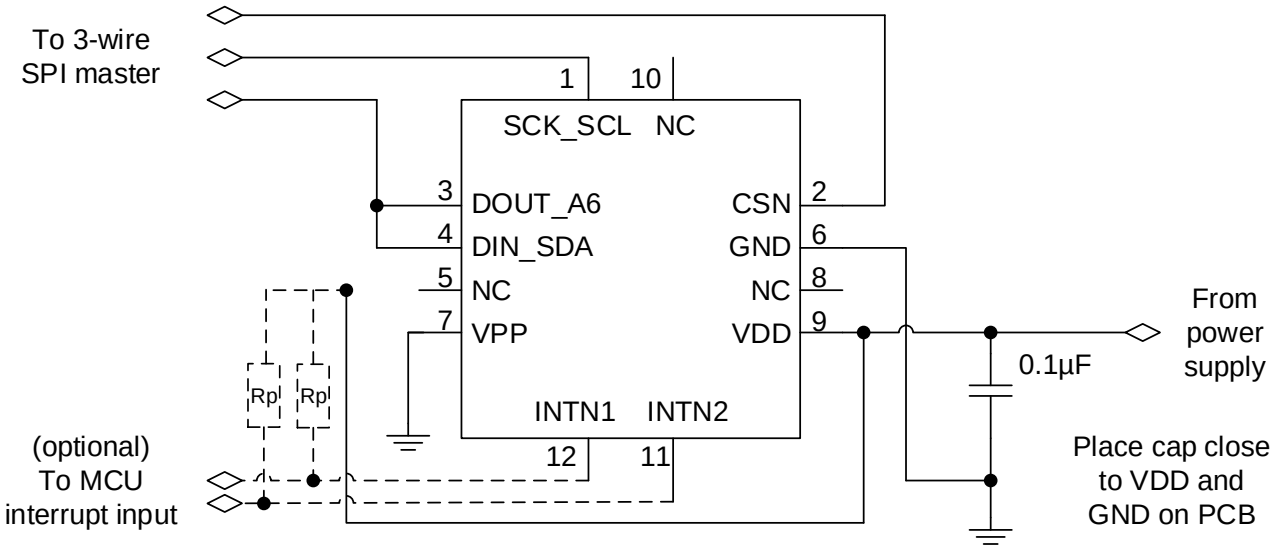

NOTE Rp: Attach typical 4.7kΩ pullup resistor if INTN is defined as open-drain.

Figure 7. Typical 3-wire SPI Application Circuit

3.5 TAPE AND REEL

Devices are shipped in reels, in standard cardboard box packaging. See **Figure 8. LIS2DH12TR Tape Dimensions** and **Figure 9. LIS2DH12TR Reel Dimensions**.

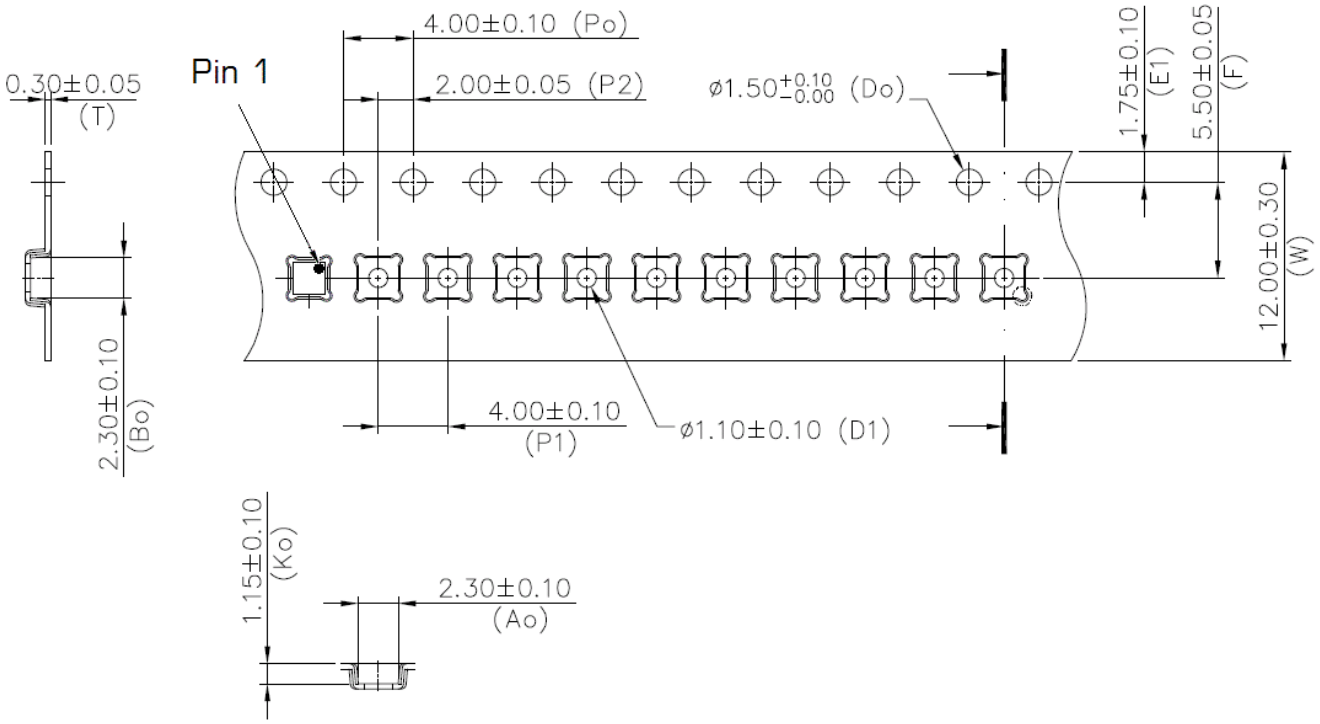

- Dimensions in mm.
- 10 sprocket hole pitch cumulative tolerance ±0.2
- Pocket position relative to sprocket hole measured as true position of pocket, not pocket hole.

Figure 8. LIS2DH12TR Tape Dimensions

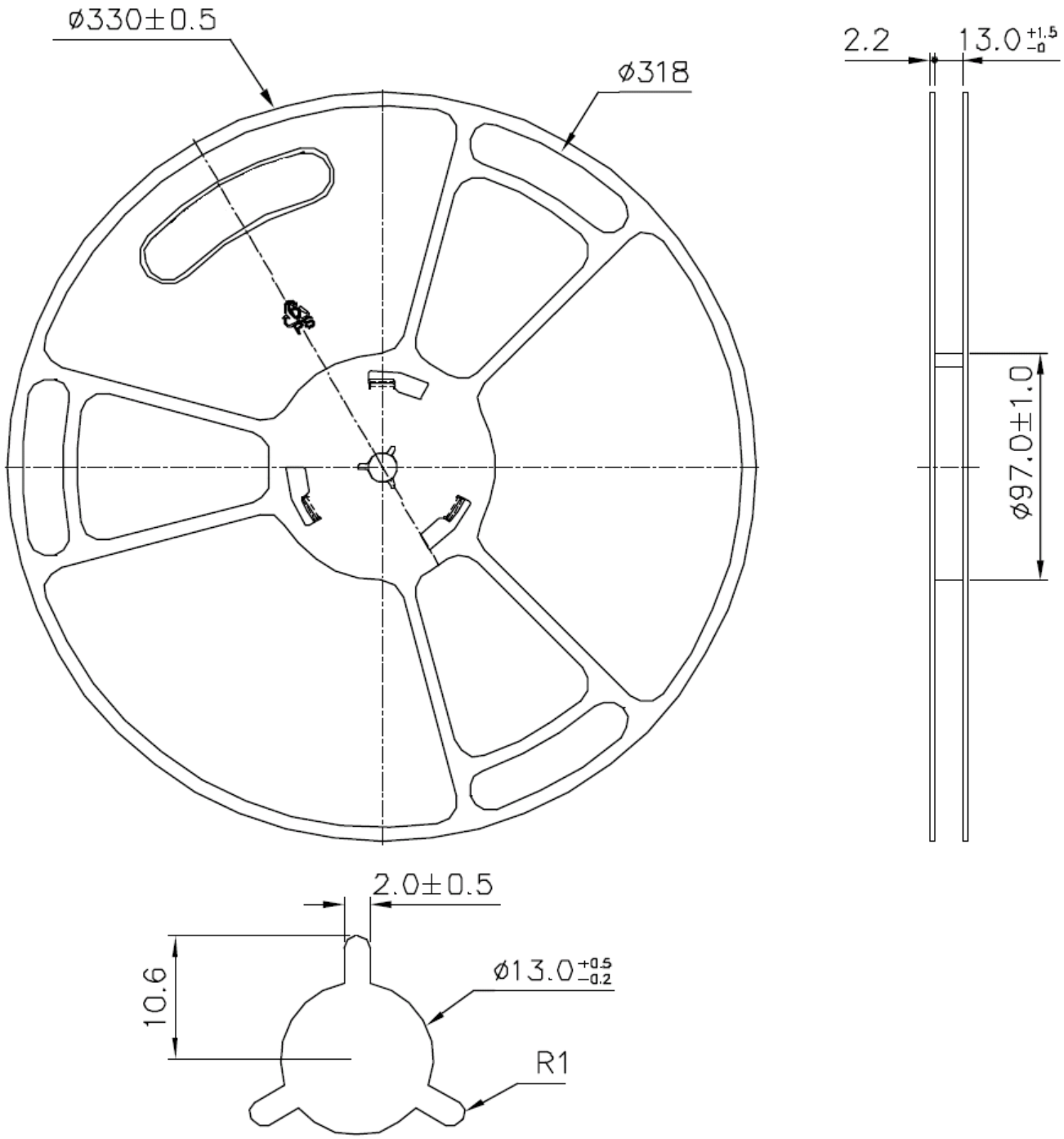

- Dimensions in mm.

Figure 9. LIS2DH12TR Reel Dimensions

3.6 SOLDERING PROFILE

The LGA package follows the reflow soldering classification profiles described in *Joint Industry Standard, Moisture/Reflow Sensitivity Classification for Nonhermetic Surface Mount Devices*, document number J-STD-020E. Reflow soldering has a peak temperature (T_p) of 260^0C

3.7 SHIPPING AND HANDLING GUIDELINES

Shipping and handling follow the standards described in *Joint Industry Standard, Handling, Packing, Shipping and Use of Moisture/Reflow Sensitive Surface Mount Devices*, document number J-STD-033C.

The following are additional handling guidelines:

- While the mechanical sensor is designed to handle high-g shock events, direct mechanical shock to the package should be avoided.
- SMT assembly houses should use automated assembly equipment with either plastic nozzles or nozzles with compliant tips (for example, soft rubber or silicone).
- Avoid g-forces beyond the specified limits during transportation.
- Handling and mounting of sensors should be done in a defined and qualified installation.

3.8 MOISTURE SENSITIVITY LEVEL CONTROL

The following are storage recommendations:

- Store the tape and reel in the *unopened* dry pack, until required on the assembly floor.
- If the dry pack has been opened or the reel has been removed from the dry pack, reseal the reel inside of the dry pack with a black protective belt. Avoid crushing the tape and reel.
- Store the cardboard box in a vertical position.

4 SPECIFICATIONS

4.1 ABSOLUTE MAXIMUM RATINGS

Parameters exceeding the Absolute Maximum Ratings may permanently damage the device.

Rating	Symbol	Minimum / Maximum Value	Unit
Supply Voltages	Pin VDD	-0.3 / +3.6	V
Acceleration, any axis, 200 µs	g MAX	10000	g
Ambient operating temperature	T_{OP}	-40 / +85	^{0}C
Storage temperature	T_{STG}	-40 / +125	^{0}C
ESD human body model	HBM	± 2000	V
Latch-up current at T_{op} = 25 ^{0}C	I_{LU}	100	mA
Input voltage to non-power pin	Pins CSN, DIN_SDA, DOUT_A6, INTN 1, INTN 2, and SCK_SCL	-0.3 / (VDD + 0.3) or 3.6 whichever is lower	V

Table 4. Absolute Maximum Ratings

4.2 SENSOR CHARACTERISTICS

VDD = 2.8V, T_{op} = 25 ^{0}C unless otherwise noted

Parameter	Conditions	Min	Typ	Max	Unit
Acceleration range			±2.0 ±4.0 ±8.0 ±12.0 ±16.0		g
Sensitivity	Acceleration range = ±2.0g		16384		LSB/g
	Acceleration range = ±4.0g		8192		
	Acceleration range = ±8.0g		4096		
	Acceleration range = ±12.0g		2730		
	Acceleration range = ±16.0g		2048		
Sensitivity Temperature Coefficient [1]	-40 ≤ T_{op} ≤ +85 ^{0}C		±0.025		%/^{0}C
Zero-g Offset	Chip Level Board Level		±20 ±50		mg
Zero-g Offset Temperature Coefficient [1]	-40 ≤ T_{op} ≤ +85 ^{0}C		±1		mg/^{0}C
RMS Noise	ODR = 125 Hz, LPF = ODR/16		0.7 (X,Y) 1.3 (Z)		mg RMS
Nonlinearity [1]	Acceleration range = ±2.0g		0.6		% FS
Cross-axis Sensitivity [1]	Between any two axes		±2		%
ODR, Output Data Rate		0.5		2000	Hz
[1] Values are based on device characterization, not tested in production.					

Table 5. Sensor Characteristics

4.3 ELECTRICAL AND TIMING CHARACTERISTICS

4.3.1 ELECTRICAL POWER AND INTERNAL CHARACTERISTICS

Parameter	Conditions	Symbol	Min	Typ	Max	Unit
Supply voltage [1]	Pin VDD	VDD	1.7		3.6	V
Sample Rate Tolerance [2]		Tclock	-2		2	%
[1] Min and Max limits are hard limits without additional tolerance. [2] Values are based on device characterization, not tested in production.						

Test condition: VDD = 2.8V, T_{op} = 25 ^{0}C unless otherwise noted

Parameter	Conditions	Min	Typ	Max	Unit
Standby current			4		µA
WAKE state current	ODR = 100 Hz		77		µA
Pad Leakage	Per I/O pad	-1	0.01	1	µA
Wake-Up time			3		ms
Start-Up time			1/ODR+1mS		ms

Table 6. Electrical Characteristics

4.3.2 ELECTRICAL CHARACTERISTICS

Parameter	Symbol	Min	Max	Unit
LOW level input voltage	VIL	-0.5	0.3*VDD	V
HIGH level input voltage	VIH	0.7*VDD	-	V
Hysteresis of Schmitt trigger inputs	Vhys	0.05*VDD	-	V
Output voltage, pin INTN 1 or INTN 2, Iol ≤ 2 mA	Vol Voh	0 0	0.4 0.9*VDD	V V
Output voltage, pin DIN_SDA (open drain), Iol ≤ 1 mA	Vols	-	0.1*VDD	V
Input current, pins DIN_SDA and SCK_SCL (input voltage between 0.1*VDD and 0.9*VDD max)	Ii	-10	10	µA
Capacitance, pins DIN_SDA and SCL [1]	Ci	-	10	pF
[1] Values are based on device characterization, not tested in production.				

Table 7. Electrical and Timing Characteristics - Interface

NOTES:

- If multiple slaves are connected to the I2C signals in addition to this device, only 1 pull-up resistor on each of DIN_SDA and SCK_SCL should exist. Also, care must be taken to not violate the I2C specification for capacitive loading.
- When pin VDD is disconnected from power or ground (e.g. Hi-Z), the device may become inadvertently powered up through the ESD diodes present on other powered signals.

4.3.3 I2C TIMING CHARACTERISTICS

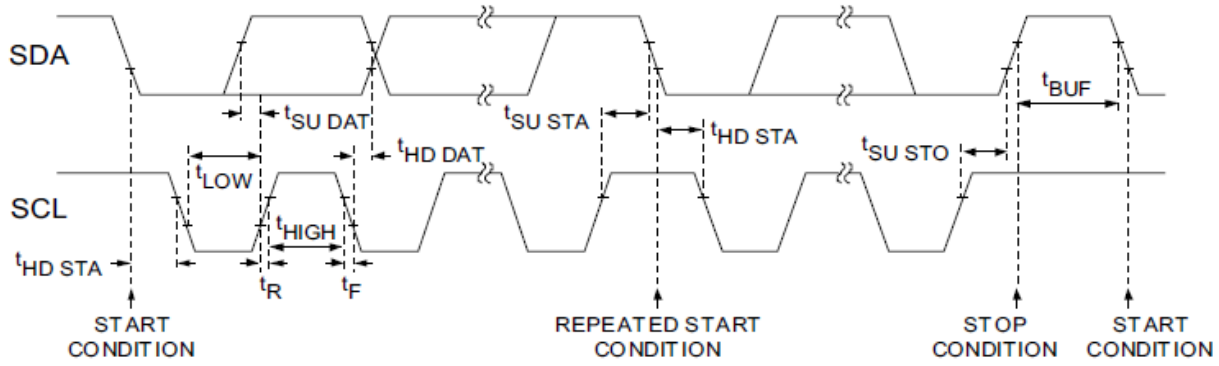

Figure 10. I2C Interface Timing

Parameter	Description	Standard Mode		Fast Mode		Fast Mode Plus		Units
		Min	Max	Min	Max	Min	Max	
f_{SCL}	SCL clock frequency	0	100	0	400	0	1000	kHz
$t_{HD;\ STA}$	Hold time (repeated) START condition	4.0	-	0.6	-	0.26	-	µs
t_{LOW}	LOW period of the SCL clock	4.7	-	1.3	-	0.5	-	µs
t_{HIGH}	HIGH period of the SCL clock	4.0	-	0.6	-	0.26	-	µs
$t_{SU;STA}$	Set-up time for a repeated START condition	4.7	-	0.6	-	0.26	-	µs
$t_{HD;DAT}$	Data hold time for CBUS compatible masters for I2C-bus devices	5 0	- 3.45	- 0	- 0.9	-	-	µs
$t_{SU;DAT}$	Data set-up time	250	-	100	-	50	-	ns
$t_{SU;STO}$	Set-up time for STOP condition	4.0	-	0.6	-	0.26	-	µs
t_{BUF}	Bus free time between a STOP and START	4.7	-	1.3	-	0.5	-	µs

Table 8. I2C Timing Characteristics

NOTE: Values are based on I2C Specification requirements, not tested in production.

See also Section 10.3 **I2C Message Format**.

5 GENERAL OPERATION

The device supports the reading of samples and device status upon interrupt or by polling.

5.1 SENSOR SAMPLING

In the WAKE state, acceleration data for X, Y, and Z axes is sampled at a rate between 0.5 and 2000 samples/second. See the **Sample Rate Register** section.

The detectable acceleration range is variable and is set in the RANGE bits of the **range and scale control register**.

Resolution	Acceleration Range	Value per bit (mg/LSB)	Full Scale Negative Reading	Full Scale Positive Reading	Comments
16-bit	± 2g	~.061	0x8000 (-32768)	0x7FFF (+32767)	Signed 2's complement number, results in XOUT_EX, YOUT_EX, ZOUT_EX. The MSB is the sign bit. (Integer interpretation also shown)
	± 4g	~.122			
	± 8g	~.244			
	± 12g	~.366			
	± 16g	~.488			

Table 9. Summary of Resolution, Range, and Scaling

5.2 OFFSET AND GAIN CALIBRATION

Digital offset and gain calibration can be performed on the sensor, if necessary, in order to reduce the effects of post-assembly influences and stresses which may cause the sensor readings to be offset from their factory values.

5.3 RESET

The device can be completely reset via a software command. Writing register 0x1C with 0x40 (bit 6) executes the equivalent of a power-on reset. The POR sequence can take up to 1ms. It is recommended SW wait at least 2ms before attempting to access device after issuing this operation. STANDBY or WAKE modes must be active before executing the reset. The reset logic uses the main oscillator clock. The SPI_DOUT/AD0 pad is sampled for the I2C address option 5 clock cycles after the OTP completes loading and AOFS parameters are decompressed.

6 OPERATIONAL STATES

The device has three states of operation: SLEEP,STANDBY and WAKE. All states are controlled by the software, there is no automatic power control.

The device defaults to the SLEEP state following a power-up and must be in the WAKE state before executing a reset.

The time to change from the STANDBY to WAKE state takes one sample period (takes less than 10 µs).

State	I2C/SPI Bus	Description
SLEEP	R/W	• Lowest power consumption • Internal clocking is halted • No motion detection, sampling, or calibration • The I2C/SPI bus can read and write to registers (resolution, range, thresholds and other settings can be changed) • Reset not allowed • Default state after a power-up
STANDBY	R/W	• Low power consumption • Internal clocking is enabled • No motion detection, sampling, or calibration • The I2C/SPI bus can read and write to registers (resolution, range, thresholds and other settings can be changed) • Reset allowed
WAKE	R	• Highest power consumption • Internal clocking is enabled • Continuous motion detection and sampling; automatic calibration is available • The I2C/SPI bus can only write to the mode register and read all other registers • Reset allowed

Table 10. Operational States

7 OPERATIONAL STATE FLOW

Figure 11. Operational State Flow shows the operational state flow for the device. The device defaults to SLEEP following power-on.

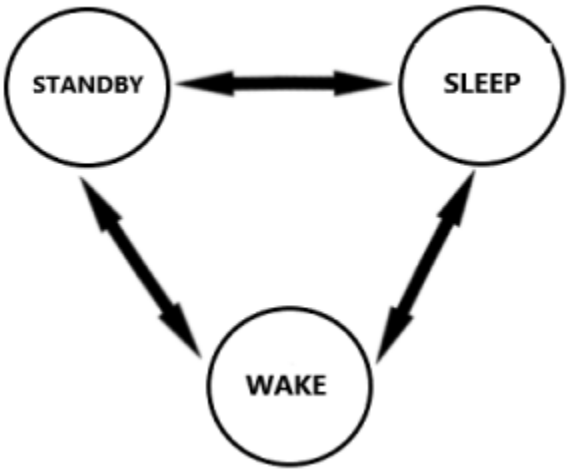

Figure 11. Operational State Flow

The operation state may be read from the STATE bits of the **device status register**. The operational state may be forced to a specific state by writing into the STATE bits of the **mode register**, as shown below. Two bits are specified in order to promote software compatibility with other Tokmas devices. The operational state will stay in the mode specified until changed.

Action	Setting	Effect
Force SLEEP State	STATE[1:0] = 00	• Switch to the SLEEP state and stay there • Disable sensor and event sampling
Force STANDBY State	STATE[1:0] = 03	• Switch to the STANDBY state and stay there • Disable sensor and event sampling
Force WAKE State	STATE[1:0] = 01	• Switch to WAKE state and stay there • Continuous sampling

Table 11. Forcing Operational States

8 INTERRUPTS

The sensor device utilizes output pin INTN 1 or INTN 2 to signal to an external microprocessor that an event has been detected. The microprocessor should contain an interrupt service routine which would perform certain tasks after receiving this interrupt and reading the associated status bits, perhaps after a sample was made ready. If interrupts are to be used, the microprocessor must set up the registers in the sensor so that when a specific event is detected, the microprocessor would receive the interrupt and the interrupt service routine would be executed. If polling is used, there is no need for the interrupt registers to be set up.

For products that use polling, the microprocessor must periodically poll the sensor and read the status data (the INTN 1 or INTN 2 pin is not used). For most applications, this is likely best done at the sensor sampling rate or faster.

NOTE: At least one I2C STOP condition must be present between samples for the sensor to update the sample data registers.

8.1 INTERRUPT OVERVIEW

Feature	Description	Comment
Interrupt Pins	Two interrupt Pins are supported: INTN1 INTN2	
Interrupt Polarity	INTN1 and INTN2 pins operate in open-drain and active-drive modes. The polarity of the interrupts is independently selectable.	The interrupt polarity/drive mode bits are in the GPIO control register 0x33.
Interrupt Sources	1 interrupt on sample 5 motion interrupts 3 FIFO interrupts	The default setting is to route SAMPLE+MOTION interrupt requests (INT1_REQ) to INTN1 pin and FIFO interrupt requests (INT2_REQ) to the INTN2 pin.
Interrupt Servicing	Interrupts may be cleared globally or individually. All interrupts are cleared by **writing** to register 0x14. FIFO interrupt bits are loaded in register 0x2F.	Global clearing is the default, use register 0x31 bit 6 (INDIV_INTR_CLR) to enable the individual interrupt clear option (bitmask mode). Read/writing to register 0x2F does not clear FIFO interrupts.
Swapping or Combining Interrupt Requests	INT1_REQ (sample + motion) and INT2_REQ (FIFO) may be swapped between the INTN1 and INTN2 pins, or combined on a single INTN1 pin.	If all interrupts are combined in a single source, the pin to be used can still be chosen by using register 0x31 bit 4.

Table 12. Interrupt Overview

8.2 ENABLING AND CLEARING INTERRUPTS

The **interrupt status register** (0x14) contains the bits for the sample acquisition interrupt ACQ_INT and the motion interrupts. The FIFO interrupt status register (0x2F) contains the bits for the FIFO interrupts The **interrupt enable register** (0x06) and FIFO control register (0x2D) determine if a flag event generates interrupts.

The interrupts are cleared and rearmed every time the interrupt status register (0x14) is written. Interrupts may be cleared globally or individually.

When an event is detected, it is masked with a flag bit in the interrupt enable register, and then the corresponding status bit is set in the status registers.

The polarity and driving mode of the external interrupt signals may be chosen by setting the INTN1 or INTN2 IPP and IAH bits in the GPIO control register (0x33).

8.3 INTERRUPT SOURCES

8.3.1 ACQ_INT INTERRUPT

The ACQ_INT flag bit in the status registers is always active. This bit is cleared when it is read. When a sample has been produced, an interrupt will be generated only if the ACQ_INT_EN bit in the interrupt enable register is active. The frequency of the ACQ_INT bit being set active is always the same as the sample rate.

8.3.2 TILT/FLIP (TILT_INT, FLIP_INT)

The TILT and FLIP flag bits in register 0x03/0x13 bit are active when the TILT/FLIP features are enabled by register 0x9 bit 0. The flag bits can transition quickly, so polled operation may be difficult. It is recommended to use the interrupt register 0x14 bits 0 or 1 instead. Note that the TILT and FLIP interrupt enables in register 0x06 bits [1:0] are separate, although there is a single control bit in register 0x09.

8.3.3 INTERRUPT ON ANYMOTION (ANYM_INT)

The ANYM flag bit in register 0x03/0x13 bit is active when the ANYM feature is enabled by register 0x9 bit 2. The flag bit can transition quickly, so polled operation may be difficult. It is recommended to use the interrupt in register 0x14 bit 2 instead. Note that the SHAKE and TILT_35 interrupts require the ANYM feature to be enabled in register 0x09 bit 2, but the ANYM interrupt enable in register 0x06 bit 2 is not required.

8.3.4 INTERRUPT ON SHAKE (SHAKE_INT)

The SHAKE flag bit in register 0x03/0x13 bit is active when the SHAKE feature is enabled by register 0x9 bit 3. The flag bit can transition quickly, so polled operation may be difficult. It is recommended to use the interrupt register 0x14 bit 3 instead. Note that the SHAKE interrupt requires the ANYM feature to be enabled in register 0x09 bit 2, but the ANYM interrupt enable in register 0x06 bit 2 is not required.

8.3.5 INTERRUPT ON TILT_35 (TILT_35_INT)

The TILT_35 flag bit in register 0x03/0x13 bit is active when the SHAKE feature is enabled by register 0x9 bit 4. The flag bit can transition quickly, so polled operation may be difficult. It is recommended to use the interrupt register 0x14 bit 4 instead. Note that the TILT_35 interrupt requires the ANYM feature to be enabled in register 0x09 bit 2, but the ANYM interrupt enable in register 0x06 bit 2 is not required.

8.3.6 INTERRUPT ON FIFO EMPTY (FIFO_EMPTY_INT)

The FIFO_EMPTY flag bit in register 0x0A bit 0 is active when the FIFO enable (FIFO_EN) control is enabled in register 0x2D bit 5. The FIFO_EMPTY flag will be set to ‘1’ following a POR or SW_RESET because the default state of the FIFO is empty. Note that the FIFO_EMPTY bit may transition on any write or read to the FIFO. The FIFO_EMPTY_INT_EN interrupt control bit is at register 0x2D bit 0. No bits in register 0x06 are required to be set.

8.3.7 INTERRUPT ON FIFO FULL (FIFO_FULL_INT)

The FIFO_FULL flag bit in register 0x0A bit 1 is active when the FIFO enable (FIFO_EN) control is enabled in register 0x2D bit 5. The FIFO_FULL flag will be set to ‘0’ following a POR or SW_RESET because the default state of the FIFO is empty. Note that the FIFO_FULL bit may transition on any write or read to the FIFO. The FIFO_FULL_INT_EN interrupt control bit is at register 0x2D bit 1. No bits in register 0x06 are required to be set.

8.3.8 INTERRUPT ON FIFO THRESHOLD (FIFO_THRESH_INT)

The FIFO_THRESH flag bit in register 0x0A bit 2 is active when the FIFO enable (FIFO_EN) control is enabled in register 0x2D bit 5. The FIFO_THRESH flag will be set to ‘0’ following a POR or SW_RESET because the default state of the FIFO is empty, and the default threshold level is a count of 16 samples (located in register 0x2E). Note that the FIFO_THRESH bit may transition on any write or read to the FIFO when a threshold level is crossed. The FIFO_THERESH_INT_EN interrupt control bit is at register 0x2D bit 2. No bits in register 0x06 are required to be set.

8.4 INTERRUPT SERVICING

There are two modes of clearing interrupts, global and bitmask/individual mode.

8.4.1 GLOBAL INTERRUPT SERVICE MODE

Global mode (register 0x31 bit 6 = 0) is the default means for servicing interrupts. In this mode any write to register 0x14 will clear *any* pending interrupts, including the FIFO interrupts in register 0x2F. The contents of the write cycle to registers 0x14 is ignored, but the address is used to generate the clear pulse. The table below shows how the interrupt sources behave in the three modes of interrupt operations. **Note that the FIFO interrupts only operate in Mode 1.**

8.4.2 BITMASK/INDIVIDUAL INTERRUPT SERVICE MODE

Bitmask/individual mode is enabled by setting register 0x31 bit 6 to '1'. The contents of the write cycle to register 0x14 determine which interrupts are cleared (0 = no change, 1 = clear). Writing to register 0x14 bit 5 clears all pending FIFO interrupt flags in 0x2F (e.g. the single FIFO_INTR bit at register 0x14 bit 5 is a combined FIFO interrupt clear). The table below shows how the interrupt sources behave in the three modes of interrupt operations. **Note that the FIFO interrupts only operate in Mode 1.**

Mode of Operation		**ACQ_INT**	**TILT_35_INT**	**SHAKE_INT**	**ANYM_INT**	**FLIP_INT**	**TILT_INT**
Mode 1 Latched	Set	End of Z-axis processing	TILT_35 condition has exceeded TILT_35 duration (1.6 to 3.0s). ANYM enable required.	SHAKE_INT peak threshold and duration have been met. ANYM enable required.	ANYM lock status met and relative threshold exceeded.	TF threshold exceeded and debounce count met for TILT to FLIP transitions.	TF threshold exceeded and debounce count met for FLAT to TILT or FLIP to TILT transitions.
	Clear	Write to 0x14	Write to 0x14	Write to 0x14	Write to 0x14	Write to 0x14	Write to 0x14
Mode 2 Temp Latch	Set	End of Z-axis processing	TILT_35 condition has exceeded TILT_35 duration (1.6 to 3.0s). ANYM enable required.	SHAKE_INT peak threshold and duration have been met. ANYM enable required.	ANYM lock status met and relative threshold exceeded.	TF threshold exceeded and debounce count met for TILT to FLIP transitions.	TF threshold exceeded and debounce count met for FLAT to TILT or FLIP to TILT transitions.
	Clear	Temp latch period timeout or write to 0x14	Temp latch period timeout or write to 0x14	Temp latch period timeout or write to 0x14	Temp latch period timeout or write to 0x14	Temp latch period timeout or write to 0x14	Temp latch period timeout or write to 0x14
Mode 3 Auto-Clear	Set	End of Z-axis processing	TILT_35 condition has exceeded TILT_35 duration (1.6 to 3.0s). ANYM enable required.	SHAKE_INT peak threshold and duration have been met. ANYM enable required.	ANYM lock status met and relative threshold exceeded.	TF threshold exceeded and debounce count met for TILT to FLIP transitions.	TF threshold exceeded and debounce count met for FLAT to TILT or FLIP to TILT transitions.
	Clear	Beginning of Z-axis accumulation, or write to 0x14	Cleared when condition ends or is reset by hardware, or write to 0x14	Cleared when condition ends or is reset by hardware, or write to 0x14	Cleared when condition ends or is reset by hardware, or write to 0x14	Cleared when condition ends or is reset by hardware, or write to 0x14	Cleared when condition ends or is reset by hardware, or write to 0x14

Table 13. Interrupt servicing details (Motion + Sample)

Mode of Operation		FIFO_THRESH	FIFO_FULL	FIFO_EMPTY
Mode 1 Latched	Set	FIFO sample count equals or exceeds the FIFO threshold count in register 0x2E.	FIFO has 32 samples; hardware writes to the FIFO in WAKE mode and FIFO_EN = 1.	FIFO has 0 samples. Reading the FIFO at register 0xD with I2C/SPI removes 1 or more samples.
	Clear	Write to 0x14	Write to 0x14	Write to 0x14

Table 14. Interrupt servicing details (FIFO)

8.5 INTERRUPT REQUESTS AND EXTERNAL INT PINS

LIS2DH12TR has two pins which support external interrupts. Each pin may be separately configured as open-drain or active drive and the polarity is programmable. Note that the drive and polarity control has been moved from register 0x07 to register 0x33.

By default the sample + motion interrupt request is routed to the INTN1 pin, and FIFO interrupt request is routed to the INTN2 pin. These requests may be swapped between the INTN1 pin and INTN2 pin or combined on a single pin.

8.5.1 SELECTING DRIVE AND POLARITY

The drive mode (open-drain or push/pull) are controlled by register 0x33 bits 7:6 and 3:2.

Addr	Name	Description	Bit								POR Value	R/W
			7	6	5	4	3	2	1	0		
0x33	GPIO_CTRL	GPIO Control Register	GPIO2_ INTN2_IPP	GPIO2_ INTN2_ IAH	Resv	Resv	GPIO1_ INTN1_IPP	GPIO1_ INTN1_ IAH	Resv	Resv	0x00	RW

Table 15. GPIO Control Register

Bit	Name	Function	Description
2	GPIO1_INTN1_IAH	Set polarity of INTN1 output.	0: The INTN1 pin is active low. 1: The INTN1 pin is active high. This bit sets the polarity level of the INTN1 pin. This bit is used in interrupt mode to set the level of the interrupt request.
3	GPIO1_INTN1_IPP	Select open drain or push/pull mode for INTN1.	0: The INTN1 pin operates in open-drain mode as an output and requires an external pullup to VDD. 1: The INTN1 pin operates in push-pull mode as an output. This bit sets the drive mode of the INTN1 pin as an interrupt request output.
6	GPIO2_INTN2_IAH	Set polarity of INTN2 output.	0: The INTN2 pin is active low. 1: The INTN2 pin is active high. This bit sets the polarity level of the INTN2 pin. This bit is used in interrupt mode to set the level of the interrupt request.
7	GPIO2_INTN2_IPP	Select open drain or push/pull mode for INTN2.	0: The INTN2 pin operates in open-drain mode as an output and requires an external pullup to VDD. 1: The INTN2 pin operates in push-pull mode as an output. This bit sets the drive mode of the INTN2 pin as an interrupt request output.

Table 16. Interrupt drive and polarity control

8.5.2 SWAPPING INT PINS

The interrupt requests driving the INTN1 and INTN2 pins may be swapped. Setting register 0x31 bit 4 to '1' (INT1_INT2_REQ_SWAP) internally swaps the INT1_REQ and INT2_REQ signals in the LIS2DH12TR. To clarify, the requests are swapped, but the bits controlling the INTN1 and INTN2 pin mode, drive, and polarity are not.

Bit	Name	Function	Description
4	INT1_INT2_REQ_SWAP	Swap INT1 and INT2 pin functionality.	0: INT1 requests are routed to the INTN1 pin, INTN2 requests are routed to the INT2 pin (default). 1: INT1 requests are routed to the INTN2 pin, INT2 requests are routed to the INTN1 pin

Table 17. Swapping Interrupt Requests, register 0x31 bit 4

8.5.3 COMBINING INTERRUPT REQUESTS

The separate internal interrupt requests (INT1_REQ or motion + sample, and INT2_REQ or FIFO) may be combined into a single request that appears on one pin. Setting register 0x2D bit 3 (COMB_INT_EN) to '1' combines both requests on INT1_REQ that is routed to the INTN1 pin. To move it to the INTN2 pin, use the pin "swap" feature described in the previous section.

Bit	Name	Function	Description
3	COMB_INT_EN	Combined interrupt enable.	0: Motion/interrupt on sample interrupts are routed to INTN1, and FIFO interrupts are routed to INTN2. (default). 1: All interrupts are routed to INTN1. When the COMB_INT_EN bit is set, all interrupts requests are routed to INT1_REQ internally. INT2_REQ becomes disabled.

Table 18. Combining interrupt requests, register 0x2D bit 3

9 SAMPLING

9.1 CONTINUOUS SAMPLING

The device has the ability to read all sampled readings in a continuous sampling fashion. The device always updates the XOUT, YOUT, and ZOUT registers at the chosen output data rate.

An optional interrupt can be generated each time the sample registers have been updated (using the ACQ_INT bit in the **interrupt enable register**). See the **ACQ_INT Interrupt** section or **status register** for more information about ACQ_INT.

9.2 SETTING THE SAMPLE RATE

The LIS2DH12TR supports eight sample rates using I2C or SPI interfaces. When decimation mode is disabled, the table below shows the “internal data rate” (IDR) which is the same as ODR (ODR = IDR). The sample rate register (0x08) selects the WAKE mode sample rate.

	I2C & SPI interface	
Rate	**IDR = ODR (Hz)**	**Reg 0x08**
0	50	0x08
1	100	0x09
2	125	0x0A
3	200	0x0B
4	250	0x0C
5	500	0x0D
6	1000	0x0E
7	2000	0x0F

Table 19. Sample Rate Settings

9.3 ADDITIONAL RATE OPTIONS

The LIS2DH12TR is able to generate slower sample rates from the frequencies listed in **Table 19.** When decimation mode is enabled the “internal data rate” (IDR) is divided by a fixed ratio to obtain an ODR or “output data rate”. If decimation mode is not enabled (default), the IDR and ODR are the same frequency. The FIFO control 2/sample rate 2 register (0x30) selects the ratio used for decimation mode.

Bits	Name	Function	Description
3:0	DEC_MODE_ RATE[3:0]	Decimation mode rate selection.	0000: Decimation mode disabled (default). 0001: Divide sample rate by 2 0010: Divide sample rate by 4 0011: Divide sample rate by 5 0100: Divide sample rate by 8 0101: Divide sample rate by 10 0110: Divide sample rate by 16 0111: Divide sample rate by 20 1000: Divide sample rate by 40 1001: Divide sample rate by 67 1010: Divide sample rate by 80 1011: Divide sample rate by 100 1100: Divide sample rate by 200 1101: Divide sample rate by 250 1110: Divide sample rate by 500 1111: Divide sample rate by 1000 When decimation mode is enabled, the internal data rate (IDR) is divided by the above factor to create a slower output data rate (ODR). The FIFO, motion block, output registers, and interrupts operate off the slower ODR when decimation mode is on. If decimation mode is disabled, then the IDR and ODR are the same value.

Table 20. Hardware Decimation Ratios

The FIFO, motion events, and interrupts operate at the decimated rate (output data rate) when decimation mode is enabled. The low pass filter always operates at the internal data rate whether decimation mode is on or off.

10 I2C INTERFACE

10.1 PHYSICAL INTERFACE

The I2C slave interface operates at a maximum speed of 1 MHz. The SDA (data) is an open-drain, bi-directional pin and the SCL (clock) is an input pin.

Note: The device always operates as an I2C slave.

An I2C master initiates all communication and data transfers and generates the SCL clock that synchronizes the data transfer. The I2C device address depends upon the state of the DOUT_A6 pin during power-up as shown in the table below.

An optional I2C watchdog timer can be enabled to prevent bus stall conditions. See the **Watchdog Timer** section for more information.

7-bit Device ID	8-bit Address – Write	8-bit Address – Read	DOUT_A6 level upon power-up
0x4C (0b1001100)	0x98	0x99	GND
0x6C (0b1101100)	0xD8	0xD9	VDD

Table 21. I2C Address Selection

The I2C interface remains active as long as power is applied to the VDD pin. In the STANDBY state, the device responds to I2C read and write cycles, but interrupts cannot be serviced or cleared. All registers can be written in the STANDBY state, but in the WAKE state, only the **mode register** can be modified (see the **Operational States** section for more information).

Internally, the registers which are used to store samples are clocked by the sample clock gated by I2C activity. Therefore, in order to allow the device to collect and present samples in the sample registers, at least one I2C STOP condition must be present between samples.

Refer to the I2C specification for a detailed discussion of the protocol. Per I2C requirements, SDA is an open drain, bi-directional pin. SCL and SDA each require an external pull-up resistor, typically 4.7kΩ.

10.2 TIMING

See the **I2C Timing Characteristics** section for I2C timing requirements.

10.3 I2C MESSAGE FORMAT

Note: At least one I2C STOP condition must be present between samples in order for the sensor to update the sample data registers.

The device uses the following general format for writing to the internal registers: The I2C master generates a START condition and then supplies the 7-bit device ID. The 8th bit is the R/W# flag (write cycle = 0). The device pulls SDA low during the 9th clock cycle indicating a positive ACK.

The second byte is the 8-bit register address of the device to access. The last byte is the data to write.

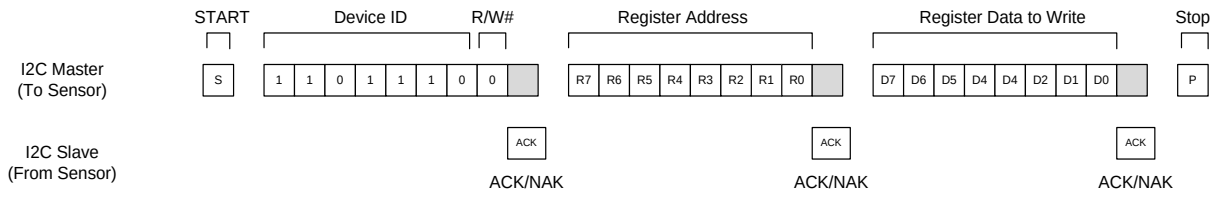

Figure 12. I2C Message Format, Write Cycle, Single Register Write

In a read cycle, the I2C master generates a START condition and then writes the device ID, R/W# flag (write cycle = 0), and register address. The master issues a RESTART condition and then writes the device ID with the R/W# flag set to ‘1’. The device shifts out the contents of the register address.

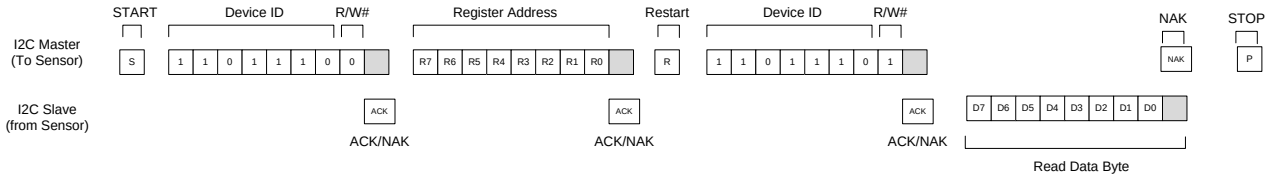

Figure 13. I2C Message Format, Read Cycle, Single Register Read

The I2C master may write or read consecutive register addresses by writing or reading additional bytes after the first access. The device will internally increment the register address.

10.4 I2C WATCHDOG TIMER

The I2C watchdog timer, when enabled (see the **mode register**), prevents bus stall conditions when the master does not provide enough clocks to the slave to complete a read cycle. The I2C watchdog timer does not resolve why the master did not provide enough clocks to complete a read cycle, but it does prevent a slave from holding the bus indefinitely.

During a read cycle, the slave that is actively driving the bus (SDA pin) does not release the bus until nine SCL clock edges are detected. While the SDA pin is held low by a slave open-drain output, any other I2C devices attached to the bus will not be able to communicate. If the slave does not see nine SCL clocks from the master within the timeout period (about 200 ms), the slave assumes a system problem has occurred and resets the I2C circuitry, releases the SDA pin, and readies the sensor for additional I2C commands.

When an I2C watchdog timer event is triggered, the I2C_WDT bit in the **device status register** is activated by the Watchdog timer hardware. No other registers are changed. External software can detect this activation by reading the I2C_WDT bit. Reading the **device status register** (0x05) clears the I2C_WDT bit.

11 SPI INTERFACE

11.1 SPI PHYSICAL INTERFACE

The device always operates as an SPI slave. An SPI master must initiate all communication and data transfers and generate the SCK_SCL clock that synchronizes the data transfer. The CSN pin must be pulled up to VDD when the SPI interface is not in use. The SPI interface can operate in 3-wire or 4-wire mode. See section **9.2** for SPI clock selection and Output Data Rate, ODR.

11.2 SPI PROTOCOL

An SPI write transaction requires a minimum of 16 clock cycles, and a SPI read transaction requires a minimum of 24 cycles of the SCK_SCL pin. The falling edge of CSN initiates the start of the SPI bus cycle. When the SPI master is writing data to the LIS2DH12TR via the SPI DIN pin, data may change when the SCL_SCK is low, and must be stable on the rising edge. Similarly, output data written from LIS2DH12TR to the SPI master is shifted out on the SPI DOUT pin on the falling edge of SCL_SCK and can be latched by the master on the rising edge of SCL_SCK. Serial data in or out of the device is always MSB first.

11.3 SPI REGISTER WRITE CYCLE - SINGLE

A single register write consists of a 16-clock transaction. As described above, the first bit is set to ‘0’ indicating a register write followed by the register address.

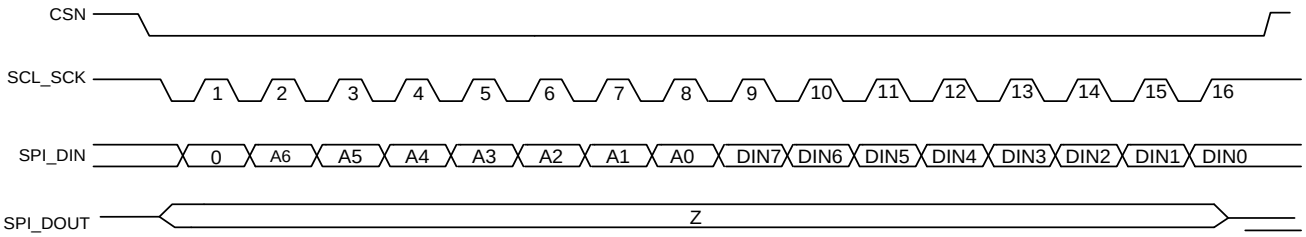

Figure 14. SPI Register Write Cycle - Single

11.4 SPI REGISTER WRITE CYCLE - BURST

A burst (multi-byte) register write cycle uses the address specified at the beginning of the transaction as the starting register address. Internally the address will auto-increment to the next consecutive address for each additional byte (8-clocks) of data written beyond clock 8.

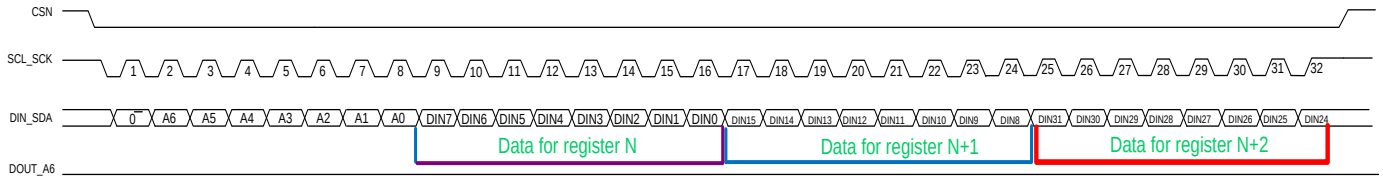

Figure 15.SPI Register Write Cycle - Burst (3-register burst example)

11.5 SPI REGISTER READ CYCLE - SINGLE

A single register read consists of a 24-clock transaction. As described above, the first bit is set to ‘1’ indicating a register read followed by the register address.

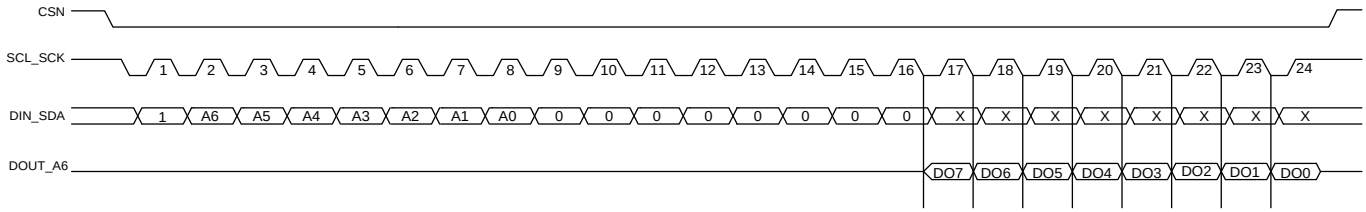

Figure 16. SPI Register Read Cycle - Single

11.6 SPI REGISTER READ CYCLE - BURST

A burst (multi-byte) register read cycle uses the address specified at the beginning of the transaction as the starting register address. Internally the address will auto-increment to the next consecutive address for each additional byte (8-clocks) of data read beyond clock 8.

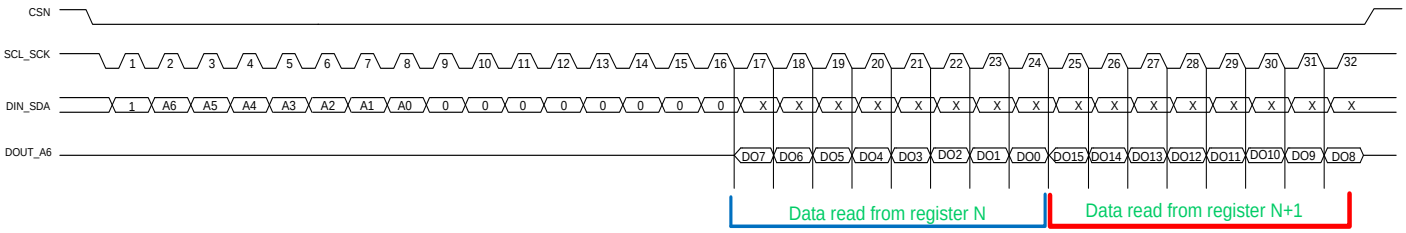

Figure 17. SPI Register Read Cycle - Burst (2 register burst example)

11.7 TIMING

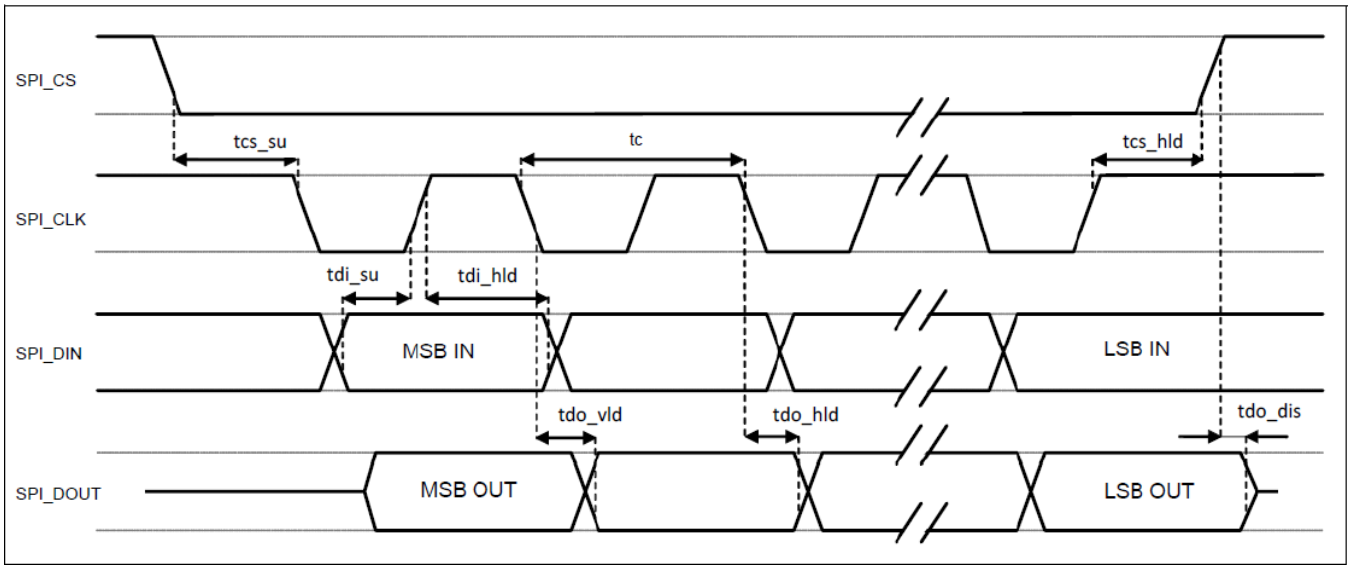

Figure 18. SPI Interface Timing

Symbol	Parameter	Value		Units
		Min	Max	
tc	SPI Clock Cycle	100		ns
fc	SPI Clock Frequency		10	MHz
tcs_su	SPI_CS Setup Time	6		ns
tcs_hld	SPI_CS Hold Time	8		ns
tdi_su	SPI_DIN Input Setup Time	5		ns
tdi_hld	SPI_DIN Input Hold Time	15		ns
tdo_vld	SPI_DOUT Valid Output Time		50	ns
tdo_hld	SPI_DOUT Output Hold Time	9		ns
tdo_dis	SPI_DOUT Output Disable Time		50	ns

Table 22. SPI Timing Characteristics

12 REGISTER INTERFACE

The device has a register interface which allows an MCU, I2C or SPI master to configure and monitor all aspects of the device. This section lists an overview of user programmable registers. By convention, bit 0 is the least significant bit (LSB) of a byte register.

12.1 REGISTER SUMMARY

NOTE: Registers are not updated with new event status or samples while an I2C or SPI cycle is in process.

Addr	Name	Description	Bit 7	Bit 6	Bit 5	Bit 4	Bit 3	Bit 2	Bit 1	Bit 0	POR Value	R/W[1]
0x00 – 0x04		RESERVED[2]										
0x05	DEV_STAT	**Device Status Register**	OTP_BUSY	SEC_ENA (TMODE)	**RESV**	I2C_WDT	**RESV**	RES_MODE	STATE[1]	STATE[0]	0x00	R
0x06	INTR_ CTRL	**Interrupt Enable**	ACQ_INT _EN	AUTO_ CLR_EN	Resv	TILT_35_ INT_EN	SHAKE_ INT_EN	ANYM_ INT_EN	FLIP_INT_ EN	TILT_INT_ EN	0x00	W
0x07	MODE	**Mode**	**RESV**	**RESV**	I2C_ WDT_POS	I2C_ WDT_NEG	**RESV**	0[3]	STATE1	STATE0	0x00	W
0x08	SR	**Sample Rate**	0[3]	0[3]	0[3]	See table Table 19	See table Table 19	RATE[2]	RATE[1]	RATE[0]	0x00	W
0x09	MOTION _CTRL	**Motion Control**	MOTION _RESET	RAW_ PROC_ STAT	Z_AXIS_ ORT	TILT_35_ EN	SHAKE_ EN	ANYM_ EN	MOTION_ LATCH	TF_ ENABLE	0x00	W
0x0A	FIFO_ STAT	**FIFO Status Register**	**RESV**	**RESV**	**RESV**	**RESV**	**RESV**	FIFO_ THRESH	FIFO_FULL	FIFO_ EMPTY	0x00	RO
0x0B	FIFO-RD_P	**FIFO Read Pointer**	**RESV**	**RESV**	FIFO_ RD_PTR[5]	FIFO_ RD_PTR[4]	FIFO_ RD_PTR[3]	FIFO_ RD_PTR[2]	FIFO_ RD_PTR[1]	FIFO_ RD_PTR[0]	0x00	RO
0x0C	FIFO_ WR_P	**FIFO Write Pointer**	**RESV**	**RESV**	FIFO_ WR_PTR[5]	FIFO_ WR_PTR[4]	FIFO_ WR_PTR[3]	FIFO_ WR_PTR[2]	FIFO_ WR_PTR[1]	FIFO_ WR_PTR[0]	0x00	RO
0x0D	XOUT_ EX_L	**XOUT Accelerometer Data LSB**	XOUT_ EX[7]	XOUT_ EX[6]	XOUT_ EX[5]	XOUT_ EX[4]	XOUT_ EX[3]	XOUT_ EX[2]	XOUT_ EX[1]	XOUT_ EX[0]	0x00	R
0x0E	XOUT_ EX_H	**XOUT Accelerometer Data MSB**	XOUT_ EX[15]	XOUT_ EX[14]	XOUT_ EX[13]	XOUT_ EX[12]	XOUT_ EX[11]	XOUT_ EX[10]	XOUT_ EX[9]	XOUT_ EX[8]	0x00	R
0x0F	YOUT_ EX_L	**YOUT Accelerometer Data LSB**	YOUT_ EX[7]	YOUT_ EX[6]	YOUT_ EX[5]	YOUT_ EX[4]	YOUT_ EX[3]	YOUT_ EX[2]	YOUT_ EX[1]	YOUT_ EX[0]	0x00	R
0x10	YOUT_ EX_L	**YOUT Accelerometer Data MSB**	YOUT_ EX[15]	YOUT_ EX[14]	YOUT_ EX[13]	YOUT_ EX[12]	YOUT_ EX[11]	YOUT_ EX[10]	YOUT_ EX[9]	YOUT_ EX[8]	0x00	R
0x11	ZOUT_ EX_L	**ZOUT Accelerometer Data LSB**	ZOUT_ EX[7]	ZOUT_ EX[6]	ZOUT_ EX[5]	ZOUT_ EX[4]	ZOUT_ EX[3]	ZOUT_ EX[2]	ZOUT_ EX[1]	ZOUT_ EX[0]	0x00	R
0x12	ZOUT_ EX_H	**ZOUT Accelerometer Data MSB**	ZOUT_ EX[15]	ZOUT_ EX[14]	ZOUT_ EX[13]	ZOUT_ EX[12]	ZOUT_ EX[11]	ZOUT_ EX[10]	ZOUT_ EX[9]	ZOUT_ EX[8]	0x00	R
0x13	STATUS	**Status Register**	NEW_ DATA	**RESV**	**FIFO_FLAG**	TILT_35_ FLAG	SHAKE_ FLAG	ANYM_ FLAG	FLIP_FLAG	TILT_ FLAG	0x00	R
0x14	INTR_ STAT	**Interrupt Status Register**	ACQ_INT	**RESV**	**FIFO_INT**	TILT_35_ INT	SHAKE_ INT	ANYM_ INT	FLIP_INT	TILT_INT	0x00	R
0x15 – 0x1F		RESERVED[2]										
0x18	Chip id	**Chip Identification Register**	1	0	1	0	0	1	0	0	0xA4	R
0x1C	RESET	**RESET Control**	0	RESET	0						0x00	R/W

Addr	Name	Description	Bit 7	Bit 6	Bit 5	Bit 4	Bit 3	Bit 2	Bit 1	Bit 0	POR Value	R/W[1]
0x20	RANGE	**Range Select Control**	0[3]	RANGE[2]	RANGE[1]	RANGE[0]	LPF_EN	LPF[2]	LPF[1]	LPF[0]	0x00	W
0x21	XOFFL	**X-Offset LSB**	XOFF[7]	XOFF[6]	XOFF[5]	XOFF[4]	XOFF[3]	XOFF[2]	XOFF[1]	XOFF[0]	Per chip	W
0x22	XOFFH	**X-Offset MSB**	XGAIN[8]	XOFF[14]	XOFF[13]	XOFF[12]	XOFF[11]	XOFF[10]	XOFF[9]	XOFF[8]	Per chip	W
0x23	YOFFL	**Y-Offset LSB**	YOFF[7]	YOFF[6]	YOFF[5]	YOFF[4]	YOFF[3]	YOFF[2]	YOFF[1]	YOFF[0]	Per chip	W
I0x24	YOFFH	**Y-Offset MSB**	YGAIN[8]	YOFF[14]	YOFF[13]	YOFF[12]	YOFF[11]	YOFF[10]	YOFF[9]	YOFF[8]	Per chip	W
0x25	ZOFFL	**Z-Offset LSB**	ZOFF[7]	ZOFF[6]	ZOFF[5]	ZOFF[4]	ZOFF[3]	ZOFF[2]	ZOFF[1]	ZOFF[0]	Per chip	W
0x26	ZOFFH	**Z-Offset MSB**	ZGAIN[8]	ZOFF[14]	ZOFF[13]	ZOFF[12]	ZOFF[11]	ZOFF[10]	ZOFF[9]	ZOFF[8]	Per chip	W
0x27	XGAIN	**X Gain**	XGAIN[7]	XGAIN[6]	XGAIN[5]	XGAIN[4]	XGAIN[3]	XGAIN[2]	XGAIN[1]	XGAIN[0]	Per chip	W
0x28	YGAIN	**Y Gain**	YGAIN[7]	YGAIN[6]	YGAIN[5]	YGAIN[4]	YGAIN[3]	YGAIN[2]	YGAIN[1]	YGAIN[0]	Per chip	W
0x29	ZGAIN	**Z Gain**	ZGAIN[7]	ZGAIN[6]	ZGAIN[5]	ZGAIN[4]	ZGAIN[3]	ZGAIN[2]	ZGAIN[1]	ZGAIN[0]	Per chip	W
0x2A -0x2C		RESERVED[2]										
0x2D	FIFO_ CTRL	**FIFO Control Register**	0[3]	FIFO_ MODE	FIFO_EN	FIFO_RESET	COMB_INT _ EN	FIFO_TH_ INT_EN	FIFO_FULL_ INT_EN	FIFO_ EMPTY_ INT_EN	0x00	W
0x2E	FIFO_TH	**FIFO Threshold Register**	**RESV**	**RESV**	**RESV**	FIFO_TH[4]	FIFO_TH[3]	FIFO_TH[2]	FIFO_TH[1]	FIFO_TH[0]	0x10	W
0x2F	FIFO_ INTR	**FIFO Interrupt Status Register**	0[3]	**RESV**	**RESV**	**RESV**	**RESV**	FIFO_ THRESH_ INT (RO)	FIFO_FULL_ INT (RO)	FIFO_EMPT Y _INT (RO)	0x00	R W
0x30	FIFO_ CTRL2 _SR2	**FIFO Control 2, Sample Rate 2 Register**	FIFO_ BURST_ MODE	0[3]	SELECT_ WRAP_ ADDR	ENABLE_ WRAP_N	DEC_MODE RATE[3]	DEC_ MODE RATE[2]	DEC_MODE RATE[1]	DEC_MODE RATE[0]	0x00	W
0x31	COMM_ CTRL	**Comm. Control Register**	0[3]	INDIV_ INTR_CLR	SPI_3WIRE _ EN	INT1_INT2_ REQ_SWAP	I2C_FILTER _ MAN	I2C_FILTER _EN	**RESV**	**RESV**	0x00	W
0x32		RESERVED[2]										
0x33	GPIO_ CTRL	**GPIO Control Register**	INTN2_ IPP	INTN2_IAH	**RESV**	**RESV**	INTN1_ IPP	INTN1_IAH	**RESV**	**RESV**	0x00	W
0x34 -0x3F		RESERVED[2]										
0x40	TF_ THRESH _LSB	**Tilt/Flip Threshold LSB**	TF_ THR[7]	TF_THR[6]	TF_THR[5]	TF_THR[4]	TF_THR[3]	TF_THR[2]	TF_THR[1]	TF_ THR[0]	0x00	W
0x41	TF_ THRESH _MSB	**Tilt/Flip Threshold MSB**	**RESV**	TF_ THR[14]	TF_ THR[13]	TF_ THR[12]	TF_ THR[11]	TF_ THR[10]	TF_THR[9]	TF_ THR[8]	0x00	W
0x42	TF_DB	**Tilt/Flip Debounce**	TF_DB[7]	TF_DB[6]	TF_DB[5]	TF_DB[4]	TF_DB[3]	TF_DB[2]	TF_DB[1]	TF_DB[0]	0x00	W
0x43	AM_ THRESH _LSB	**AnyMotion Threshold LSB**	ANYM_ THR[7]	ANYM_ THR[6]	ANYM_ THR[5]	ANYM_ THR[4]	ANYM_ THR[3]	ANYM_ THR[2]	ANYM_ THR[1]	ANYM_ THR[0]	0x00	W
0x44	AM_ THRESH _MSB	**AnyMotion Threshold MSB**	**RESV**	ANYM_ THR[14]	ANYM_ THR[13]	ANYM_ THR[12]	ANYM_ THR[11]	ANYM_ THR[10]	ANYM_ THR[9]	ANYM_ THR[8]	0x00	W

Addr	Name	Description	Bit 7	Bit 6	Bit 5	Bit 4	Bit 3	Bit 2	Bit 1	Bit 0	POR Value	R/W[1]
0x45	AM_DB	**AnyMotion Debounce**	ANYM_ DB[7]	ANYM_ DB[6]	ANYM_ DB[5]	ANYM_ DB[4]	ANYM_ DB[3]	ANYM_ DB[2]	ANYM_ DB[1]	ANYM_ DB[0]	0x00	W
0x46	SHK_ THRESH _LSB	**Shake Threshold LSB**	SH _ THR[7]	SH _ THR[6]	SH _ THR[5]	SH _ THR[4]	SH _ THR[3]	SH _ THR[2]	SH _ THR[1]	SH _ THR[0]	0x00	W
0x47	SHK_ THRESH _MSB	**Shake Threshold MSB**	SH_ THR[15]	SH _ THR[14]	SH _ THR[13]	SH _ THR[12]	SH _ THR[11]	SH _ THR[10]	SH _ THR[9]	SH _ THR[8]	0x00	W
0x48	PK_P2P_ DUR_ THRESH _LSB	**Peak-to-Peak Duration LSB**	PK_P2P_ DUR[7]	PK_P2P_ DUR[6]	PK_P2P_ DUR[5]	PK_P2P_ DUR[4]	PK_P2P_ DUR[3]	PK_P2P_ DUR[2]	PK_P2P_ DUR[1]	PK_P2P_ DUR[0]	0x00	W
0x49	PK_P2P_ DUR_ THRESH _MSB	**Shake Duration and Peak-to-Peak Duration MSB**	**RESV**	SHK_CNT_ DUR[2]	SHK_CNT _DUR[1]	SHK_CNT_ DUR[0]	PK_P2P_ DUR[11]	PK_P2P_ DUR[10]	PK_P2P_ DUR[9]	PK_P2P_ DUR[8]	0x00	W
0x4A	TIMER_ CTRL	**Timer Control**	TEMP_ PER_INT _EN	TEMP_ PERIOD[2]	TEMP_ PERIOD[1]	TEMP_ PERIOD[0]	**RESV**	TILT_ 35[2]	TILT_35[1]	TILT_ 35[0]	0x00	W
0x4B	RD_CNT	**Read Count Register**	RD_CNT[7]	RD_CNT[6]	RD_CNT[5]	RD_CNT[4]	RD_CNT[3]	RD_CNT[2]	RD_CNT[1]	RD_CNT[0]	0x06	R/W
0x4C – 0x50		RESERVED[2]										

[1] 'R' registers are read-only, via external I2C access. 'W' registers are read-write, via external I2C access.
[2] Registers designated as 'RESERVED' should not be accessed by software.
[3] Software must write a zero (0) to this bit.
[4] Software must write a one (1) to this bit.

Table 23. Register Summary

12.2 (0X05)DEVICE STATUS REGISTER

The device status register reports various conditions of the sensor circuitry.

Addr	Name	Description	Bit 7	Bit 6	Bit 5	Bit 4	Bit 3	Bit 2	Bit 1	Bit 0	POR Value	R/W
0x05	DEV_ STAT	Device Status	OTP_ BUSY	Resv	Resv	I2C_WDT	Resv	RES_ MODE	STATE[1]	STATE[0]	0x00	R

Name	Description
STATE[1:0]	Operating mode of the current device. **00**: SLEEP. Clocks are not running and X, Y, and Z-axis data are not sampled. **01**: WAKE. Clocks are running and X, Y, and Z-axis data are acquired at the sample rate. **10**: Reserved. **11**: STANDBY. Clocks are running but X, Y, and Z-axis data are not sampled.
RES_MODE	Resolution mode of the current device. **0**: 16-bit (high) resolution is enabled. **1**: Reserved.
I2C_WDT	I2C watchdog timeout. This bit is cleared when register 0x05 is read. **0**: A watchdog event is not detected. **1**: A watchdog event has been detected by the hardware and the I2C slave state machine is reset to idle.
OTP_BUSY	One-Time programming (OTP) activity status. **0**: Internal memory is idle and the device is ready to use. **1**: Internal memory is active and the device cannot be used.

Table 24. Device Status Register

12.3 (0X06) INTERRUPT ENABLE REGISTER

The interrupt enable register enables or disables the reporting of interrupt status for each interrupt source. FIFO interrupt are enabled in the FIFO control register 0x2D.

Addr	Name	Description	Bit 7	Bit 6	Bit 5	Bit 4	Bit 3	Bit 2	Bit 1	Bit 0	POR Value	R/W
0x06	INTR_ CTRL	Interrupt Enable	ACQ_INT_ EN	AUTO_ CLR_EN	Resv	TILT_35_ INT_EN	SHAKE_ INT_EN	ANYM_ INT_EN	FLIP_INT_ EN	TILT_INT_ EN	0x00	W

Name	Description
TILT_INT_EN	Use with the tilt/flip feature in the motion control register (register 0x09, bit 0) to activate the reporting status of the tilt interrupt. **0**: Tilt interrupt is disabled. **1**: Tilt interrupt is enabled.
FLIP_INT_EN	Use with the tilt/flip feature in the motion control register (register 0x09, bit 0) to activate the reporting status of the flip interrupt. **0**: Flip interrupt is disabled. **1**: Flip interrupt is enabled.
ANYM_INT_EN	Use with the AnyMotion feature in the motion control register (register 0x09, bit 2) to activate the reporting status of the AnyMotion interrupt. **0**: AnyMotion interrupt is disabled. **1**: AnyMotion interrupt is enabled.
SHAKE_INT_EN	Use with the shake feature in the motion control register (register 0x09, bit 3) and the AnyMotion feature in the motion control register (register 0x09, bit 2) to activate the reporting status of the shake interrupt. **0**: Shake interrupt is disabled. **1**: Shake interrupt is enabled.
TILT_35_INT_EN	Use with the tilt-35 feature in the motion control register (register 0x09, bit 4) and the AnyMotion feature in the motion control register (register 0x09, bit 2) to activate the reporting status of the tilt-35 interrupt. **0**: Tilt-35 interrupt is disabled. **1**: Tilt-35 interrupt is enabled.
AUTO_CLR_EN	Clear pending interrupts automatically or by reading a register. Enabling more than one interrupt timeout or service feature may produce unexpected results. **0**: Clear pending interrupts by writing to register 0x14. **1**: Automatically clear pending interrupts if the interrupt condition is no longer valid. Refer to **Interrupts** for more information about interrupts.
ACQ_INT_EN	Generate interrupts. **0**: Disable automatic interrupt after each sample (default). **1**: Enable automatic interrupt after each sample (activates the ACQ_INT flag, bit 7, in register 0x14).

Table 25. Interrupt Enable Register

12.4 (0X07) MODE REGISTER

The mode register controls the active operating state of the accelerometer. This register can be written from all operational states (WAKE, or STANDBY).

Addr	Name	Description	Bit 7	Bit 6	Bit 5	Bit 4	Bit 3	Bit 2	Bit 1	Bit 0	POR Value	R/W
0x07	MODE	Mode	Resv	Resv	I2C_ WDT_POS	I2C_ WDT_NEG	0	0[1]	STATE[1]	STATE[0]	0x00	W
[1]Software must write a zero (0) to bit 2.												

Name	Description
STATE[1:0]	Accelerometer operational state. **00**: SLEEP. Clocks are not running and X, Y, and Z-axis data are not sampled. **01**: WAKE. Clocks are running and X, Y, and Z-axis data are acquired at the sample rate. **10**: Reserved. **11**: STANDBY. Clocks are running but X, Y, and Z-axis data are not sampled
I2C_WDT_NEG	Watchdog timer for negative SCL stalls. **0**: The I2C watchdog timer for negative SCL stalls is disabled (default). **1**: The I2C watchdog timer for negative SCL stalls is enabled.
I2C_WDT_POS	Watchdog timer for positive SCL stalls. **0**: The I2C watchdog timer for positive SCL stalls is disabled (default). **1**: The I2C watchdog timer for positive SCL stalls is enabled.

Table 26. Mode Register States

12.5 (0X08) SAMPLE RATE REGISTER

The sample rate register sets the sampling output data rate (ODR) for the sensor and the clock frequency of the main oscillator.

Addr	Name	Description	Bit 7	Bit 6	Bit 5	Bit 4	Bit 3	Bit 2	Bit 1	Bit 0	POR Value	R/W
0x08	SR	Sample Rate	0[1]	0[1]	0[1]	See table below		RATE[2]	RATE[1]	RATE[0]	0x00	RW

[1]Software must write a zero (0).

Name	Description
RATE[2:0]	Select the Output Data Rate, ODR

Table 27. Sample Rate Register

	I2C & SPI interface	
Rate	IDR = ODR (Hz)	Reg 0x08
0	50	0x08
1	100	0x09
2	125	0x0A
3	200	0x0B
4	250	0x0C
5	500	0x0D
6	1000	0x0E
7	2000	0x0F

Table 28. Sample Rate Values

12.6 (0X09) MOTION CONTROL REGISTER

The motion control register enables the flags and interrupts for motion detection features.

Addr	Name	Description	Bit 7	Bit 6	Bit 5	Bit 4	Bit 3	Bit 2	Bit 1	Bit 0	POR Value	R/W
0x09	MOTION_ CTRL	Motion Control	MOTION_ RESET	RAW_ PROC_ STAT	Z_AXIS_ ORT	TILT_35_ EN	SHAKE_ EN	ANYM_EN	MOTION_ LATCH	TF_ ENABLE	0x00	W

Name	Description
TF_ENABLE	Enable or disable the tilt/flip feature. Used with the tilt/flip features in registers 0x13, 0x14, and 0x06. **0**: Tilt/Flip feature is disabled (default). **1**: Tilt/Flip feature is enabled.
MOTION_LATCH	If motion interrupts are used, this bit is generally not used. **0**: Motion block does not latch outputs. **1**: Motion block latches outputs.
ANYM_EN	Enable or disable the AnyMotion feature. Used with the AnyMotion feature in registers 0x13, 0x14, and 0x06 and the shake and tilt-35 features in registers 0x14 and 0x06. **0**: AnyMotion feature is disabled (default). **1**: AnyMotion feature is enabled.
SHAKE _EN	Enable or disable the shake feature. Used with the shake feature in registers 0x13, 0x14, and 0x06. **0**: Shake feature is disabled (default). **1**: Shake feature is enabled. ANYM_EN must also be enabled.
TILT_35 _EN	Enable or disable the tilt-35 feature. Used with tilt-35 feature in registers 0x13, 0x14, and 0x06. **0**: Tilt-35 feature is disabled (default). **1**: Tilt-35 feature is enabled. ANYM_EN must also be enabled.
Z_AXIS_ORT	Z-axis orientation. **0**: Z-axis orientation is positive through the top of the package (default). **1**: Z-axis orientation is positive through the bottom of the package.
RAW_PROC_STAT	Enable or disable filtering of motion data. **0**: Motion flag bits are filtered by debounce and other settings (default). **1**: Motion flag bits are real-time, raw data.
MOTION_RESET	Motion block reset. This bit is not automatically cleared. **0**: The motion block is not in reset (default). **1**: The motion block is held in reset. The software must set this bit for the reset to be cleared.

Table 29. Motion Control Register

12.7 (0X0A) FIFO STATUS REGISTER

Addr	Name	Description	Bit 7	Bit 6	Bit 5	Bit 4	Bit 3	Bit 2	Bit 1	Bit 0	POR Value	R/W
0x0A	FIFO_STAT	FIFO Status	**RESV**	**RESV**	**RESV**	**RESV**	**RESV**	FIFO_ THRESH	FIFO_FULL	FIFO_ EMPTY	0x01	RO

This register returns the current flags/status from the FIFO. These signals are not registered so the bits may transition unexpectedly at any time. The FIFO interrupt enable bits in register 0x2D do not affect these flags. Note that the FIFO_EMPTY flag is ‘1’ at boot or POR.

Bit	Name	Description
0	FIFO_EMPTY	0: FIFO is not empty 1: FIFO is empty (default) This flag is valid if the FIFO is enabled or disabled.
1	FIFO_FULL	0: FIFO is not full (default) 1: FIFO is full This flag is valid if the FIFO is enabled or disabled.
2	FIFO_THRESH	0: FIFO threshold is less than threshold setting (default) 1: FIFO threshold is at or greater than threshold setting. The default threshold level is 16 or ½ of the 32 sample FIFO capacity.
7:3	RESV	Reserved, returns ‘00000’ when read.

Table 19: FIFO Status, 0x0A Register

12.8 (0X0B) FIFO READ POINTER REGISTER

Addr	Name	Description	Bit 7	Bit 6	Bit 5	Bit 4	Bit 3	Bit 2	Bit 1	Bit 0	POR Value	R/W
0x0B	FIFO_R_P	FIFO Read Pointer	**RESV**	**RESV**	FIFO_ RD_PTR[5]	FIFO_ RD_PTR[4]	FIFO_ RD_PTR[3]	FIFO_ RD_PTR[2]	FIFO_ RD_PTR[1]	FIFO_ RD_PTR[0]	0x00	RO

READ POINTER

The FIFO read pointer is a 6-bit value that points to the current address of the read port on the FIFO. The actual address is bits 4:0 since the FIFO is limited to 32 locations. Bit 5 is used as “wrap” flag by hardware when comparing the read and write pointer.

Bit	Name	Description
4:0	FIFO_RD_PTR[4:0]	00000 – default This is the current address the FIFO read pointer is accessing. The valid range is 0 to 31.
5	FIFO_RD_PTR[5]	0 -default This bit is used by hardware to manage the full/empty status of the FIFO. This is not a physical address bit.
7:6	RESV	Reserved, returns ‘00’ when read.

Table 12-30: FIFO read pointer, register 0x0B

12.9 (0X0C) FIFO WRITE POINTER REGISTER

Addr	Name	Description	Bit 7	Bit 6	Bit 5	Bit 4	Bit 3	Bit 2	Bit 1	Bit 0	POR Value	R/W
0x0C	FIFO_W_P	FIFO Write Pointer	**RESV**	**RESV**	FIFO_ WR_PTR[5]	FIFO_ WR_PTR[4]	FIFO_ WR_PTR[3]	FIFO_ WR_PTR[2]	FIFO_ WR_PTR[1]	FIFO_ WR_PTR[0]	0x00	RO

The FIFO write pointer is a 6-bit value that points to the current address of the write port on the FIFO. The actual address is bits 4:0 since the FIFO is limited to 32 locations. Bit 5 is used as "wrap" flag by hardware when comparing the read and write pointers. This value will always be updated when a new valid sample is acquired (Z-axis data must be successfully acquired).

Bit	Name	Description
4:0	FIFO_WR_PTR[4:0]	00000 – default This is the current address the FIFO write pointer is accessing. The valid range is 0 to 31.
5	FIFO_WR_PTR[5]	0 -default This bit is used by hardware to manage the full/empty status of the FIFO. This is not a physical address bit.
7:6	RESV	Reserved, returns '00' when read.

Table 12-31: FIFO write pointer, register 0xC

12.10 (0X0D - 0X12) XOUT, YOUT AND ZOUT DATA ACCELEROMETER REGISTERS

X, Y, and Z-axis accelerometer measurements are in 16-bit, signed 2's complement format. Register addresses 0x0D to 0x12 hold the latest sampled data from the X, Y, and Z accelerometers.

When the FIFO is enabled (register 0x2D bit 5), reading from address 0x0D supplies data from the FIFO instead of the output registers.

During FIFO reads, software must start a read at address 0x0D and complete a read to address 0x12 for the FIFO pointers to increment correctly.

Once an I2C start bit has been recognized by the device, registers will not be updated until an I2C stop bit has occurred. Therefore, if software desires to read the low and high byte registers 'atomically', knowing that the values have not been changed, it should do so by issuing a start bit, reading one register, then reading the other register then issuing a stop bit. Note that all 6 registers may be read in one burst with the same effect.

Addr	Name	Description	Bit 7	Bit 6	Bit 5	Bit 4	Bit 3	Bit 2	Bit 1	Bit 0	POR Value	R/W
0x0D	XOUT_EX_L	XOUT Accelerometer Data LSB	XOUT_EX[7]	XOUT_EX[6]	XOUT_EX[5]	XOUT_EX[4]	XOUT_EX[3]	XOUT_EX[2]	XOUT_EX[1]	XOUT_EX[0]	0x00	R
0x0E	XOUT_EX_H	XOUT Accelerometer Data MSB	XOUT_EX[15]	XOUT_EX[14]	XOUT_EX[13]	XOUT_EX[12]	XOUT_EX[11]	XOUT_EX[10]	XOUT_EX[9]	XOUT_EX[8]	0x00	R
0x0F	YOUT_EX_L	YOUT Accelerometer Data LSB	YOUT_EX[7]	YOUT_EX[6]	YOUT_EX[5]	YOUT_EX[4]	YOUT_EX[3]	YOUT_EX[2]	YOUT_EX[1]	YOUT_EX[0]	0x00	R
0x10	YOUT_EX_L	YOUT Accelerometer Data MSB	YOUT_EX[15]	YOUT_EX[14]	YOUT_EX[13]	YOUT_EX[12]	YOUT_EX[11]	YOUT_EX[10]	YOUT_EX[9]	YOUT_EX[8]	0x00	R
0x11	ZOUT_EX_L	ZOUT Accelerometer Data LSB	ZOUT_EX[7]	ZOUT_EX[6]	ZOUT_EX[5]	ZOUT_EX[4]	ZOUT_EX[3]	ZOUT_EX[2]	ZOUT_EX[1]	ZOUT_EX[0]	0x00	R
0x12	ZOUT_EX_H	ZOUT Accelerometer Data MSB	ZOUT_EX[15]	ZOUT_EX[14]	ZOUT_EX[13]	ZOUT_EX[12]	ZOUT_EX[11]	ZOUT_EX[10]	ZOUT_EX[9]	ZOUT_EX[8]	0x00	R

Table 32. Accelerometer LSB and MSB Registers

12.11 (0X13) STATUS REGISTER

The status register contains the flag and status bits for sample acquisition and motion detection.

Addr	Name	Description	Bit 7	Bit 6	Bit 5	Bit 4	Bit 3	Bit 2	Bit 1	Bit 0	POR Value	R/W
0x13	STATUS	Status Register	NEW_ DATA	Resv	FIFO_FLA G	TILT_35_ FLAG	SHAKE_ FLAG	ANYM_ FLAG	FLIP_FLAG	TILT_ FLAG	0x00	R

Name	Description
TILT_FLAG	This bit is active when the tilt feature in the motion control register (register 0x09, bit 0) is enabled. If polling is used, use the tilt interrupt in the interrupt status register (register 0x14, bit 0) instead because this bit can transition quickly. **0**: Tilt condition is not detected. **1**: Tilt condition is detected.
FLIP_FLAG	This bit is active when the flip feature in the motion control register (register 0x09, bit 0) is enabled. If polling is used, use the flip interrupt in the interrupt status register (register 0x14, bit 1) instead because this bit can transition quickly. **0**: Flip condition is not detected. **1**: Flip condition is detected.
ANYM_FLAG	This bit is active when the AnyMotion feature in the motion control register (register 0x09, bit 2) is enabled. If polling is used, use the AnyMotion interrupt in the interrupt status register (register 0x14, bit 2) instead because this bit can transition quickly. **0**: AnyMotion condition is not detected. **1**: AnyMotion condition is detected.
SHAKE_FLAG	This bit is active when the shake feature in the motion control register (register 0x09, bit 3) is enabled. If polling is used, use the shake interrupt in the interrupt status register (register 0x14, bit 3) instead because this bit can transition quickly. **0**: Shake condition is not detected. **1**: Shake condition is detected.
TILT_35_FLAG	This bit is active when the tilt-35 feature in the motion control register (register 0x09, bit 4) is enabled. If polling is used, use the tilt-35 interrupt in the interrupt status register (register 0x14, bit 4) instead because this bit can transition quickly. **0**: Tilt-35 condition is not detected. **1**: Tilt-35 condition is detected.
FIFO_FLAG	This flag is an OR of the three FIFO flags from register 0x0A, FIFO_FULL, FIFO_THRESH, and FIFO_EMPTY.
NEW_DATA	This bit is always active, only operates in WAKE mode, and is cleared and rearmed each time this register is read. This flag is set when XYZ data is written to registers 0x0D - 0x12. The host must poll this bit at the sample rate or faster to see this bit transition. **0**: No data has been generated by the sensor since the last read. **1**: Data has been acquired and written to the output registers (0x0D - 0x12).

Table 33. Status Register

12.12 (0X14) INTERRUPT STATUS REGISTER

The interrupt status register reports the status of any pending interrupt sources. Each interrupt source must be enabled by the corresponding interrupt enable bit in register 0x06. All interrupts are cleared each time this register is written (default). Individual interrupts may be cleared using a bitmask if the INDIV_INTR_CLR bit is set in the communications control register, address 0x31.

Addr	Name	Description	Bit 7	Bit 6	Bit 5	Bit 4	Bit 3	Bit 2	Bit 1	Bit 0	POR Value	R/W
0x14	INTR_ STAT	Interrupt Status Register	ACQ_INT	Resv	FIFO_INT	TILT_35_ INT	SHAKE_ INT	ANYM_ INT	FLIP_INT	TILT_INT	0x00	RW

Name	Description
TILT_INT	This bit is active when the tilt feature in the interrupt enable register (register 0x06, bit 0) is enabled and the tilt/flip feature in the motion control register (register 0x09, bit 0) is enabled. **0**: Tilt interrupt is not pending. **1**: Tilt interrupt is pending.
FLIP_INT	This bit is active when the flip feature in the interrupt enable register (register 0x06, bit 1) is enabled and the tilt/flip feature in the motion control register (register 0x09, bit 0) is enabled. **0**: Flip interrupt is not pending. **1**: Flip interrupt is pending.
ANYM_INT	This bit is active when the AnyMotion feature in the interrupt enable register (register 0x06, bit 2) is enabled and the AnyMotion feature in the motion control register (register 0x09, bit 2) is enabled. **0**: AnyMotion interrupt is not pending. **1**: AnyMotion interrupt is pending.
SHAKE_INT	This bit is active when the shake feature in the interrupt enable register (register 0x06, bit 3) is enabled, the shake feature in the motion control register (register 0x09, bit 3) is enabled, and the AnyMotion feature in the motion control register (register 0x09, bit 2) is enabled. **0**: Shake interrupt is not pending. **1**: Shake interrupt is pending.
TILT_35_INT	This bit is active when the tilt-35 feature in the interrupt enable register (register 0x06, bit 4) is enabled, the tilt-35 feature in the motion control register (register 0x09, bit 4) is enabled, and the AnyMotion feature in the motion control register (register 0x09, bit 2) is enabled. **0**: Tilt-35 interrupt is not pending. **1**: Tilt-35 interrupt is pending.
FIFO_INT	0: FIFO_INTR interrupt is not pending. 1: FIFO_INTR interrupt is pending. This bit is an OR of the three FIFO interrupt flags from register 0x2F, FIFO_FULL_INTR, FIFO_THRESH_INTR, and FIFO_EMPTY_INTR.
ACQ_INT	This bit only operates in WAKE mode. This bit is active when the interrupt feature in the interrupt enable register (register 0x06, bit 7) is enabled. **0**: Sample interrupt is not pending. **1**: Sample interrupt is pending.

Table 34. Interrupt Status Register

12.13 (0X18) CHIP IDENTIFICATION REGISTER

This read only register reports the chip ID of the device.

Addr	Name	Description	Bit 7	Bit 6	Bit 5	Bit 4	Bit 3	Bit 2	Bit 1	Bit 0	POR Value	R/W
0x18	Chip ID	X-Offset LSB	1*	0*	1*	0*	0*	1*	0*	0*	0xA4	RO

12.14 (0X1C) RESET CONTROL

The RESET CONTROL register contains additional test controls for Aries.

NOTE: Software must write a zero (0) to Bit[0~5] and Bit 7.

Addr	Name	Description	Bit 7	Bit 6	Bit 5	Bit 4	Bit 3	Bit 2	Bit 1	Bit 0	POR Value	R/W
0x1C	Reset	Reset Control	0*	RESET	0*	0*	0*	0*	0*	0*	0x00	R/W

Bit	Name	Description
6	RESET	0: Normal operation (default) 1: Force a power-on-reset (POR) sequence. OTP contents are reloaded into registers, and any other registers are returned to their default values. This bit is self-clearing. **STANDBY MODE must be enabled before write '1' to Bit 6.**

12.15 (0X20) RANGE AND SCALE CONTROL REGISTER

The range and scale control register sets the resolution, range, and filtering options for the accelerometer. All values are in sign-extended 2's complement format. Values are reported in registers 0x0D – 0x12 (the hardware formats the output).

Addr	Name	Description	Bit 7	Bit 6	Bit 5	Bit 4	Bit 3	Bit 2	Bit 1	Bit 0	POR Value	R/W
0x20	RANGE	Range Select Control	0[1]	RANGE[2]	RANGE[1]	RANGE[0]	LPF_EN	LPF[2]	LPF[1]	LPF[0]	0x00	W
[1]Software must write a zero (0) to bit 7.												

Name	Description
RANGE[2:0]	Resolution range of the accelerometer, based on the current resolution. 000: ± 2g 001: ± 4g 010: ± 8g 011: ± 16g 100: ± 12g 101: Reserved. 110: Reserved. 111: Reserved.
LPF_EN	0: Low pass Filter Disabled 1: Low Pass Filter Enabled
LPF[2:0]	000: Reserved
	001: Bandwidth setting 1, Fc = IDR / 4.255
	010: Bandwidth setting 2, Fc = IDR / 6
	011: Bandwidth setting 3, Fc = IDR / 12
	100: Reserved
	101: Bandwidth setting 5, Fc = IDR / 16
	110: Reserved
	111: Reserved

Table 35. Range and Scale Control Register

12.16 (0X21 – 0X22) X-AXIS DIGITAL OFFSET REGISTERS

The X-axis digital offset registers contains a signed 2's complement 14-bit value used to offset the output of the X-axis filter. These registers are loaded from the OTP at device initialization and POR. If necessary, these values can be overwritten by software.

Register 0x22 bit 7 is the ninth bit of X-axis gain (XGAIN). See **X-Axis Digital Gain Registers** for more information about XGAIN.

NOTE: When modifying these registers with new gain or offset values, software should perform a read-modify-write type of access to ensure that unrelated bits do not get changed.

Addr	Name	Description	Bit 7	Bit 6	Bit 5	Bit 4	Bit 3	Bit 2	Bit 1	Bit 0	POR Value	R/W
0x21	XOFFL	X-Offset LSB	XOFF[7]	XOFF[6]	XOFF[5]	XOFF[4]	XOFF[3]	XOFF[2]	XOFF[1]	XOFF[0]	Per chip	W
0x22	XOFFH	X-Offset MSB	XGAIN[8]	XOFF[14]	XOFF[13]	XOFF[12]	XOFF[11]	XOFF[10]	XOFF[9]	XOFF[8]	Per chip	W

Table 36. X-Axis Digital Offset Registers

12.17 (0X23 – 0X24) Y-AXIS DIGITAL OFFSET REGISTERS

The Y-axis digital offset registers contains a signed 2's complement 14-bit value used to offset the output of the Y-axis filter. These registers are loaded from the OTP at device initialization and POR. If necessary, these values can be overwritten by software.

Register 0x24 bit 7 is the ninth bit of Y-axis gain (YGAIN). See **Y-Axis Digital Gain Registers** for more information about YGAIN.

NOTE: When modifying these registers with new gain or offset values, software should perform a read-modify-write type of access to ensure that unrelated bits do not get changed.

Addr	Name	Description	Bit 7	Bit 6	Bit 5	Bit 4	Bit 3	Bit 2	Bit 1	Bit 0	POR Value	R/W
0x23	YOFFL	Y-Offset LSB	YOFF[7]	YOFF[6]	YOFF[5]	YOFF[4]	YOFF[3]	YOFF[2]	YOFF[1]	YOFF[0]	Per chip	W
0x24	YOFFH	Y-Offset MSB	YGAIN[8]	YOFF[14]	YOFF[13]	YOFF[12]	YOFF[11]	YOFF[10]	YOFF[9]	YOFF[8]	Per chip	W

Table 37. Y-Axis Digital Offset Registers

12.18 (0X25 – 0X26) Z-AXIS DIGITAL OFFSET REGISTERS

The Z-axis digital offset registers contains a signed 2's complement 14-bit value used to offset the output of the Z-axis filter. These registers are loaded from the OTP at device initialization and POR. If necessary, these values can be overwritten by software.

Register 0x26 bit 7 is the ninth bit of Z-axis gain (ZGAIN). See **Z-Axis Digital Gain Registers** for more information about ZGAIN.

NOTE: When modifying these registers with new gain or offset values, software should perform a read-modify-write type of access to ensure that unrelated bits do not get changed.

Addr	Name	Description	Bit 7	Bit 6	Bit 5	Bit 4	Bit 3	Bit 2	Bit 1	Bit 0	POR Value	R/W
0x25	ZOFFL	Z-Offset LSB	ZOFF[7]	ZOFF[6]	ZOFF[5]	ZOFF[4]	ZOFF[3]	ZOFF[2]	ZOFF[1]	ZOFF[0]	Per chip	W
0x26	ZOFFH	Z-Offset MSB	ZGAIN[8]	ZOFF[14]	ZOFF[13]	ZOFF[12]	ZOFF[11]	ZOFF[10]	ZOFF[9]	ZOFF[8]	Per chip	W

Table 38. Z-Axis Digital Offset Registers

12.19 (0X22 & 0X27) X-AXIS DIGITAL GAIN REGISTERS

The X-axis digital gain registers contains an unsigned 9-bit value. These registers are loaded from the OTP at device initialization and POR. If necessary, these values can be overwritten by software.

Register 0x22 bit 7 is the ninth bit of XGAIN.

NOTE: When modifying these registers with new gain values, software should perform a read-modify-write type of access to ensure that unrelated bits do not get changed.

Addr	Name	Description	Bit 7	Bit 6	Bit 5	Bit 4	Bit 3	Bit 2	Bit 1	Bit 0	POR Value	R/W
0x22	XOFFH	X-Offset MSB	XGAIN[8]	XOFF[14]	XOFF[13]	XOFF[12]	XOFF[11]	XOFF[10]	XOFF[9]	XOFF[8]	Per chip	W
0x27	XGAIN	X Gain	XGAIN[7]	XGAIN[6]	XGAIN[5]	XGAIN[4]	XGAIN[3]	XGAIN[2]	XGAIN[1]	XGAIN[0]	Per chip	W

Table 39. X-Axis Digital Gain Registers

12.20 (0X24 & 0X28) Y-AXIS DIGITAL GAIN REGISTERS

The Y-axis digital gain registers contains an unsigned 9-bit value. These registers are loaded from the OTP at device initialization and POR. If necessary, these values can be overwritten by software.

Register 0x24 bit 7 is the ninth bit of YGAIN.

NOTE: When modifying these registers with new gain values, software should perform a read-modify-write type of access to ensure that unrelated bits do not get changed.

Addr	Name	Description	Bit 7	Bit 6	Bit 5	Bit 4	Bit 3	Bit 2	Bit 1	Bit 0	POR Value	R/W
0x24	YOFFH	Y-Offset MSB	YGAIN[8]	YOFF[14]	YOFF[13]	YOFF[12]	YOFF[11]	YOFF[10]	YOFF[9]	YOFF[8]	Per chip	W
0x28	YGAIN	Y Gain	YGAIN[7]	YGAIN[6]	YGAIN[5]	YGAIN[4]	YGAIN[3]	YGAIN[2]	YGAIN[1]	YGAIN[0]	Per chip	W

Table 40. Y-Axis Digital Offset Registers

12.21 (0X26 & 0X29) Z-AXIS DIGITAL GAIN REGISTERS

The Z-axis digital gain registers contains an unsigned 9-bit value. These registers are loaded from the OTP at device initialization and POR. If necessary, these values can be overwritten by software.

Register 0x26 bit 7 is the ninth bit of ZGAIN.

NOTE: When modifying these registers with new gain values, software should perform a read-modify-write type of access to ensure that unrelated bits do not get changed.

Addr	Name	Description	Bit 7	Bit 6	Bit 5	Bit 4	Bit 3	Bit 2	Bit 1	Bit 0	POR Value	R/W
0x26	ZOFFH	Z-Offset MSB	ZGAIN[8]	ZOFF[14]	ZOFF[13]	ZOFF[12]	ZOFF[11]	ZOFF[10]	ZOFF[9]	ZOFF[8]	Per chip	W
0x29	ZGAIN	Z Gain	ZGAIN[7]	ZGAIN[6]	ZGAIN[5]	ZGAIN[4]	ZGAIN[3]	ZGAIN[2]	ZGAIN[1]	ZGAIN[0]	Per chip	W

Table 41. Z-Axis Digital Offset Registers

12.22 (0X2D) FIFO CONTROL REGISTER

This register controls the options for the LIS2DH12TR FIFO. This register was previously undefined in Mensa.

Addr	Name	Description	Bit 7	Bit 6	Bit 5	Bit 4	Bit 3	Bit 2	Bit 1	Bit 0	POR Value	R/W
0x2D	FIFO_CTRL	FIFO Control Register	0	FIFO_ MODE	FIFO_EN	FIFO_RESET	COMB_INT _EN	FIFO_TH_ INT_EN	FIFO_FULL_ INT_EN	FIFO_ EMPTY_ INT_EN	0x00	RW

Bit	Name	Function	Description
0	FIFO_EMPTY_INT_EN	FIFO empty interrupt enable	0: FIFO empty interrupt enable is disabled (default) 1: FIFO empty interrupt enable is enabled.
1	FIFO_FULL_INT_EN	FIFO full interrupt enable	0: FIFO full interrupt enable is disabled (default) 1: FIFO full interrupt enable is enabled.
2	FIFO_TH_INT_EN	FIFO threshold interrupt enable.	0: FIFO threshold interrupt enable is disabled (default) 1: FIFO full threshold enable is enabled.
3	COMB_INT_EN	Combined interrupt enable	0: Motion/interrupt on sample interrupts are routed to INTN1, and FIFO interrupts are routed to INTN2. (default). 1: All interrupts are routed to INTN1. When the COMB_INT_EN bit is set, all interrupts requests are routed to INTN1, INTN2 becomes disabled.
4	FIFO_RESET	FIFO reset control	0: FIFO is not reset (default) 1: FIFO is reset, read and write pointers are cleared. In a FIFO reset, **the contents of the FIFO are not cleared,** only the FIFO control logic, read and write pointers are reset.
5	FIFO_EN	FIFO enable	0: FIFO and FIFO operations are disabled (default) 1: FIFO and FIFO operations are enabled.

6	FIFO_MODE	FIFO mode select	0: Normal operation, the FIFO continues to accept new sample data as long as there is space remaining (default) 1: Watermark (threshold) mode, once the amount of samples in the FIFO reaches or exceeds the threshold level, the FIFO stops accepting new sample data. Any additional sample data is “dropped”.
7	Reserved	Reserved	This bit must be ‘0’ for current FIFO operation.

Table 42. FIFO Control bit assignments

12.23 (0X2E) FIFO THRESHOLD REGISTER

Addr	Name	Description	Bit 7	Bit 6	Bit 5	Bit 4	Bit 3	Bit 2	Bit 1	Bit 0	POR Value	R/W
0x2E	FIFO_CTRL	FIFO Threshold Register	**RESV**	**RESV**	**RESV**	FIFO_TH[4]	FIFO_TH[3]	FIFO_TH[2]	FIFO_TH[1]	FIFO_TH[0]	0x10	RW

FIFO THRESHOLD SETTING

Register 0x2E holds the threshold or “watermark” level to apply to the number of samples in the FIFO. Note that the POR default of the level is 0x10 (decimal 16), or ½ of the total size of the FIFO.

Bit	Name	Description
4:0	FIFO_TH[4:0]	The FIFO threshold level selects the number of samples in the FIFO for different FIFO events. The threshold value may be 1 to 31 (00001 to 11111).
7:5	RESV	Reserved, returns ‘0’ when read.

Table 43. FIFO Threshold level bit assignments

12.24 (0X2F) FIFO INTERRUPT STATUS REGISTER

Addr	Name	Description	Bit 7	Bit 6	Bit 5	Bit 4	Bit 3	Bit 2	Bit 1	Bit 0	POR Value	R/W
0x2E	FIFO_ INTR	FIFO Interrupt Status Register	RESV	**RESV**	**RESV**	**RESV**	**RESV**	FIFO_ THRESH_ INT (RO)	FIFO_FULL_ INT (RO)	FIFO_EMPT Y_INT (RO)	0x00	R

Register 0x2F reports the status of any pending FIFO interrupts. The corresponding FIFO interrupt enable bit must be enabled in register 0x2D for the interrupts to be detected.

Bit	Name	Function	Description
0	FIFO_EMPTY_INT (RO)	FIFO Empty interrupt flag.	0: No FIFO empty interrupt is pending. 1: FIFO empty interrupt is pending. This read only bit reports the status of the FIFO empty interrupt. It requires register 0x2B bit 0 be enabled.
1	FIFO_FULL_ INT (RO)	FIFO Full interrupt flag.	0: No FIFO full interrupt is pending. 1: FIFO full interrupt is pending. This read only bit reports the status of the FIFO full interrupt. It requires register 0x2B bit 1 be enabled.
2	FIFO_ THRESH_ INT (RO)	FIFO Threshold interrupt flag.	0: No FIFO threshold interrupt is pending. 1: FIFO threshold interrupt is pending. This read only bit reports the status of the FIFO threshold interrupt. It requires register 0x2B bit 2 be enabled.
7:3	RESV (RO)	Reserved	Reserved bits, returns ‘00000’ when read.

Table 44. Interrupt status bit assignments

12.25 (0X30) FIFO CONTROL REGISTER2, SAMPLE RATE REGISTER 2

This register controls the behavior of the FIFO burst mode, and the hardware decimation feature of the LIS2DH12TR.

The hardware decimation feature divides the internal data rate (IDR) generated by the timebase module. Blocks at the end of signal acquisition pipeline may run at a slower output data rate (ODR). The FIFO, motion, and interrupt blocks operate at the decimated rate while the ADC and LPF filter operate at the higher internal rate. The hardware decimation feature is disabled by default and can be applied to any data rate generated by the settings in register 0x08.

FIFO burst mode refers to the reading of multiple samples from the FIFO in the same transaction. FIFO_BURST must be set to '1' any time SW intends to drain more than one sample in the same read cycle. It is not necessary to use FIFO_BURST mode for reading only one sample at a time (single 6, 7, or 8-byte sequence).

Addr	Name	Description	Bit 7	Bit 6	Bit 5	Bit 4	Bit 3	Bit 2	Bit 1	Bit 0	POR Value	R/W
0x30	FIFO_CTRL 2_SR2	FIFO Control Register 2, Sample Rate 2 Register	FIFO_ BURST_ MODE	0	SELECT_ WRAP_ADD R	ENABLE_ WRAP_N	DEC_MODE RATE[3]	DEC_MODE RATE[2]	DEC_MODE RATE[1]	DEC_MODE RATE[0]	00000000	RW

Bit	Name	Function	Description
3:0	DEC_MODE_ RATE[3:0]	Decimation mode rate selection.	0000: Decimation mode disabled (default). 0001: Divide sample rate by 2 0010: Divide sample rate by 4 0011: Divide sample rate by 5 0100: Divide sample rate by 8 0101: Divide sample rate by 10 0110: Divide sample rate by 16 0111: Divide sample rate by 20 1000: Divide sample rate by 40 1001: Divide sample rate by 67 1010: Divide sample rate by 80 1011: Divide sample rate by 100 1100: Divide sample rate by 200 1101: Divide sample rate by 250 1110: Divide sample rate by 500 1111: Divide sample rate by 1000 When decimation mode is enabled, the internal data rate (IDR) is divided by the above factor to create a slower output data rate (ODR). The FIFO, motion block, output registers, and interrupts operate off the slower ODR when decimation mode is on. If decimation mode is disabled, then the IDR and ODR are the same value.
4	ENABLE_WRAP_N	Enable/disable automatic address increment to	0: Internal register address pointer will "wrap" at address selected by bit 5 (default).

		internal register file. Applies to I2C and SPI operations.	1: Internal register address pointer will increment to the next consecutive value.
5	SELECT_WRAP_ ADDR	Select the register address "wrap" value during burst operations.	0: Internal register address wraps from address 0x12 to 0x0D on read cycles. (default). 1: Internal register address wraps from address 0x14 to 0x0D on read cycles. This bit determines which register address triggers a "wrap" to register 0x0D (XOUT_LSB) during a read cycle. Address 0x12 is the MSB of the Z-axis data, and address 0x14 is the address of the interrupt data register. Setting this bit to a '1' allows the contents of 0x13 (accel flag bits) and 0x14 (accel interrupt flags) to be included in a read cycle that includes XOUT[15:0], YOUT[15:0], ZOUT[15:0], STATUS[7:0], and INTR_STATUS[7:0].
6	Reserved	Reserved.	This bit must be '0' for correct FIFO operation.
7	FIFO_BURST	Enable FIFO burst read operations.	0: FIFO read cycle reads a single 6 byte XYZ sample from the FIFO (default). 1: FIFO read cycle reads 2 or more 6-byte XYZ samples (up to 32) from the FIFO. The length of the burst read must be set in the Read Count register, 0x4B.

Table 45. FIFO Control 2 bit assignments

12.26 (0X31) COMMUNICATION CONTROL REGISTER

Addr	Name	Description	Bit 7	Bit 6	Bit 5	Bit 4	Bit 3	Bit 2	Bit 1	Bit 0	POR Value	R/W
0x31	COMM_CTRL	Comm. Control Register	**Resv**	INDIV_ INTR_CLR	SPI_3WIRE_ EN	INT1_INT2_ REQ_SWAP	I2C_FILTER _MAN	I2C_FILTER _EN	**RESV**	**RESV**	0x00	RW

Bit	Name	Function	Description
0	RESV	Reserved	Reserved, returns ‘0’ when read.
1	RESV	Reserved	Reserved, returns ‘0’ when read.
2	I2C_FILTER_EN	I2C slew rate control.	0: I2C slew rate is disabled in SCL and SDA pins. (default) 1: I2C slew rate is enabled in SCL and SDA pins. This bit allows manual control of the SCL and SDA slew rate control. This bit only has an effect is bit 3 is a ‘1’.
3	I2C_FILTER_MAN	Enable manual slew rate control.	0: I2C slew rate control is in auto-mode (default). 1: I2C slew rate control is in manual mode, use bit 2 to control. By default the I2C pin slew rate control is managed by the LIS2DH12TR hardware. If this bit is ‘1’, then bit 2 is used to control the slew rate directly.
4	INT1_INT2_REQ_S WAP	Swap INT1 and INT2 pin functionality.	0: INT1 requests are routed to the INTN1 pin, INT2 requests are routed to the INTN2 pin (default). 1: INT1 requests are routed to the INTN2 pin, INT2 requests are routed to the INTN1 pin.
5	SPI_3WIRE_EN	Enable SPI 3-wire mode.	0: SPI 3-wire more is disabled (default). 1: SPI 3-wire mode is enabled When this bit is enabled, the DOUT_A6 pin becomes a bi-directional data pin. SPI MISO and MOSI is applied to the DOUT_A6 pin. Note that it is possible to simply tie the DIN_SDA and DOUT_A6 pins together to enable 3-wire mode without using this bit.
6	INDIV_INTR_CLR	Enable individual interrupt mode.	0: Individual interrupt clear mode is disabled. All interrupts are cleared by writing to register 0x14, contents of write cycle do not matter. (default). 1: Individual interrupt clear mode is enabled. Individual interrupts are cleared by writing to register 0x14 as a bitmask. Each bit of register 0x14 controls a corresponding interrupt service/clear bit.
7	Reserved	Reserved	This bit must be ‘0’ for proper device operation.

Table 46. Communication Control bit assignments

12.27 (0X33) GPIO CONTROL REGISTER

This register is used to select the INTN1 pin and INTN2 pin polarity and drive mode when the pins are used as interrupt request outputs.

Addr	Name	Description	Bit 7	Bit 6	Bit 5	Bit 4	Bit 3	Bit 2	Bit 1	Bit 0	POR Value	R/W
0x33	GPIO_ CTRL	GPIO Control Register	INTN2_ IPP	INTN2_IAH	**RESV**	**RESV**	INTN1_ IPP	INTN1_IAH	**RESV**	**RESV**	0x00	W

Bit	Name	Function	Description
1:0	Reserved	Reserved	Reserved
2	GPIO1_INTN1_IAH	Set polarity of INTN1 output.	0: The INTN1 pin is active low. 1: The INTN1 pin is active high. This bit sets the polarity level of the INTN1 pin. This bit is used in interrupt mode to set the level of the interrupt request.
3	GPIO1_INTN1_IPP	Select open drain or push/pull mode for INTN1.	0: The INTN1 pin operates in open-drain mode as an output. 1: The INTN1 pin operates in push-pull mode as an output. This bit sets the drive mode of the INTN1 pin as an interrupt request output. Open drain mode requires an external pullup resistor.
5:4	Reserved	Reserved	Reserved
6	GPIO2_INTN2_IAH	Set polarity of INTN2 output.	0: The INTN2 pin is active low. 1: The INTN2 pin is active high. This bit sets the polarity level of the INTN2 pin. This bit is used in interrupt mode to set the level of the interrupt request, or in GPIO mode to set the level of the GPIO output drive.
7	GPIO2_INTN2_IPP	Select open drain or push/pull mode for INTN2.	0: The INTN2 pin operates in open-drain mode as an output. 1: The INTN2 pin operates in push-pull mode as an output. This bit sets the drive mode of the INTN2 pin as an interrupt request output. Open drain mode requires an external pullup resistor.

Table 47. GPIO Control Register

12.28 (0X40 – 0X41) TILT/FLIP THRESHOLD REGISTERS

The tilt/flip threshold registers are used for both the flat/tilt/flip and tilt-35 algorithms.

For the flat/tilt/flip algorithm, these registers hold the programmed 15-bit threshold value to detect the flat/tilt/flip position of the device. If the sample value is greater than the programmed value of these registers, a tilt condition is detected. If the sample value is less than the programmed value of these registers, a flat/flip condition is detected. A flat/flip condition is dependent on the Z-axis value and the Z-axis orientation bit (register 0x09, bit 5).

For the tilt-35 algorithm, these registers hold the programmed 15-bit threshold value that defines the amount of tilt to detect. When the programmed tilt is detected, the tilt-35 interrupt is set in the interrupt status registers (register 0x14, bit 4).

Addr	Name	Description	Bit 7	Bit 6	Bit 5	Bit 4	Bit 3	Bit 2	Bit 1	Bit 0	POR Value	R/W
0x40	TF_ THRESH_ LSB	Tilt/Flip Threshold LSB	TF_THR[7]	TF_THR[6]	TF_THR[5]	TF_THR[4]	TF_THR[3]	TF_THR[2]	TF_THR[1]	TF_ THR[0]	0x00	W
0x41	TF_ THRESH_ MSB	Tilt/Flip Threshold MSB	Resv	TF_ THR[14]	TF_ THR[13]	TF_ THR[12]	TF_ THR[11]	TF_ THR[10]	TF_THR[9]	TF_ THR[8]	0x00	W

Table 48. Tilt/Flip Threshold Registers

12.29 (0X42) TILT/FLIP DEBOUNCE REGISTER

The tilt/flip debounce register holds the programmed 8-bit duration of a tilt/flip. When a tilt/flip condition is detected and the duration of the condition is greater than the programmed value of this register, the tilt/flip interrupt is set in the interrupt status registers (register 0x14, bits 0 and 1).

Addr	Name	Description	Bit 7	Bit 6	Bit 5	Bit 4	Bit 3	Bit 2	Bit 1	Bit 0	POR Value	R/W
0x42	TF_DB	Tilt/Flip Debounce	TF_DB[7]	TF_DB[6]	TF_DB[5]	TF_DB[4]	TF_DB[3]	TF_DB[2]	TF_DB[1]	TF_DB[0]	0x00	W

Table 49. Tilt/Flip Debounce Register

12.30 (0X43 – 0X44) ANYMOTION THRESHOLD REGISTERS

The Anymotion threshold registers hold the programmed 15-bit threshold value to detect a change in the position of the device. If the change in position between the current sample value and previous sample value on any axis is greater than the programmed value of this register, an AnyMotion condition is detected. When the change in position exceeds the programmed AnyMotion threshold, the AnyMotion interrupt is set in the interrupt status registers (register 0x14, bit 2).

Addr	Name	Description	Bit 7	Bit 6	Bit 5	Bit 4	Bit 3	Bit 2	Bit 1	Bit 0	POR Value	R/W
0x43	AM_ THRESH_ LSB	AnyMotion Threshold LSB	ANYM_ THR[7]	ANYM_ THR[6]	ANYM_ THR[5]	ANYM_ THR[4]	ANYM_ THR[3]	ANYM_ THR[2]	ANYM_ THR[1]	ANYM_ THR[0]	0x00	W
0x44	AM_ THRESH_ MSB	AnyMotion Threshold MSB	Resv	ANYM_ THR[14]	ANYM_ THR[13]	ANYM_ THR[12]	ANYM_ THR[11]	ANYM_ THR[10]	ANYM_ THR[9]	ANYM_ THR[8]	0x00	W

Table 50. AnyMotion Threshold Registers

12.31 (0X45) ANYMOTION DEBOUNCE REGISTER

The AnyMotion debounce register holds the programmed 8-bit duration of any motion. After an AnyMotion condition is detected, if another AnyMotion condition is not detected for the programmed duration, the AnyMotion interrupt is cleared in the interrupt status registers (register 0x14, bit 2).

Addr	Name	Description	Bit 7	Bit 6	Bit 5	Bit 4	Bit 3	Bit 2	Bit 1	Bit 0	POR Value	R/W
0x45	AM_DB	AnyMotion Debounce	ANYM_ DB[7]	ANYM_ DB[6]	ANYM_ DB[5]	ANYM_ DB[4]	ANYM_ DB[3]	ANYM_ DB[2]	ANYM_ DB[1]	ANYM_ DB[0]	0x00	W

Table 51. AnyMotion Debounce Register

12.32 (0X46 – 0X47) SHAKE THRESHOLD REGISTERS

The shake threshold registers hold the programmed 15-bit threshold value to detect a shake. If the change in position between the current sample value and previous sample value on any axis is greater than the programmed value of this register, a shake condition is detected.

Addr	Name	Description	Bit 7	Bit 6	Bit 5	Bit 4	Bit 3	Bit 2	Bit 1	Bit 0	POR Value	R/W
0x46	SHK_ THRESH_ LSB	Shake Threshold LSB	SH _ THR[7]	SH _ THR[6]	SH _ THR[5]	SH _ THR[4]	SH _ THR[3]	SH _ THR[2]	SH _ THR[1]	SH _ THR[0]	0x00	W
0x47	SHK_ THRESH_ MSB	Shake Threshold MSB	SH_ THR[15]	SH _ THR[14]	SH _ THR[13]	SH _ THR[12]	SH _ THR[11]	SH _ THR[10]	SH _ THR[9]	SH _ THR[8]	0x00	W

Table 52. Shake Threshold Registers

12.33 (0X48 – 0X49) SHAKE DURATION, PEAK-TO-PEAK REGISTERS

The shake duration and peak-to-peak registers hold the programmed 12-bit threshold value of a peak and the peak-to-peak width of a shake and the programmed 3-bit threshold value of the shake counter.

The data in these registers and the shake threshold registers is used to determine if the shake interrupt should be set.

If a shake condition is detected, the shake counter is incremented and the shake's peak is detected and measured. If the peak's width is greater than the peak threshold set in this register, the shake counter continues to increment (measuring the duration of the peak event). When a shake condition is no longer detected, the peak-to-peak event is measured and the shake counter continues to increment (measuring the duration of the peak-to-peak event). When the peak-to-peak threshold is surpassed, the shake counter continues to increment, measuring the duration of the peak event. The shake counter continues to increment each time a peak or peak-to-peak threshold is surpassed. When the shake counter threshold is surpassed, the shake interrupt is set in the interrupt status registers (register 0x14, bit 3).

Addr	Name	Description	Bit 7	Bit 6	Bit 5	Bit 4	Bit 3	Bit 2	Bit 1	Bit 0	POR Value	R/W
0x48	PK_P2P_DUR_THRESH_LSB	Peak-to-Peak Duration LSB	PK_P2P_DUR[7]	PK_P2P_DUR[6]	PK_P2P_DUR[5]	PK_P2P_DUR[4]	PK_P2P_DUR[3]	PK_P2P_DUR[2]	PK_P2P_DUR[1]	PK_P2P_DUR[0]	0x00	W
0x49	PK_P2P_DUR_THRESH_MSB	Shake Duration and Peak-to-Peak Duration MSB	Resv	SHK_CNT_DUR[2]	SHK_CNT_DUR[1]	SHK_CNT_DUR[0]	PK_P2P_DUR[11]	PK_P2P_DUR[10]	PK_P2P_DUR[9]	PK_P2P_DUR[8]	0x00	W

Table 53. Shake Duration and Peak-to-Peak Registers

12.34 (0X4A) TIMER CONTROL REGISTER

The timer control register sets the period or duration of two features driven by the 10 Hz low speed clock.

Addr	Name	Description	Bit 7	Bit 6	Bit 5	Bit 4	Bit 3	Bit 2	Bit 1	Bit 0	POR Value	R/W
0x4A	TIMER_ CTRL	Timer Control	TEMP_ PER_INT_ EN	TEMP_ PERIOD[2]	TEMP_ PERIOD[1]	TEMP_ PERIOD[0]	Resv	TILT_ 35[2]	TILT_35[1]	TILT_ 35[0]	0x00	W

Name	Description
TILT_35[2:0]	Duration of a valid tilt-35 angle detection. **000**: 1.6 s (default) **001**: 1.8 s **010**: 2.0 s **011**: 2.2 s **100**: 2.4 s **101**: 2.6 s **110**: 2.8 s **111**: 3.0 s
TEMP_PERIOD[2:0]	Timeout or re-arm time for the temporary latch on the TEST_INT pin. **000**: 200 ms (default) **001**: 400 ms **010**: 800 ms **011**: 1600 ms **100**: 3200 ms **101**: 6400 ms **110**: Reserved **111**: Reserved
TEMP_PER_INT_EN	Temporary latch. **0**: The temporary latch feature is disabled (default). **1**: The temporary latch feature is enabled.

Table 54. Timer Control Register

12.35 (0X4B) READ COUNT REGISTER

The read count register (0x4B) sets length of FIFO burst read transactions.

Addr	Name	Description	Bit 7	Bit 6	Bit 5	Bit 4	Bit 3	Bit 2	Bit 1	Bit 0	POR Value	R/W
0x4B	RD_CNT	Read Count	RD_CNT[7]	RD_CNT[6]	RD_CNT[5]	RD_CNT[4]	RD_CNT[3]	RD_CNT[2]	RD_CNT[1]	RD_CNT[0]	0x06	RW

Bit	Name	Function	Description
7:0	RD_CNT[7:0]	Sample count to be used during I2C/SPI read cycles.	0x06: POR value (default) If register 0x30 bit 7 (FIFO_BURST) is enabled, this register is the number of samples to be read in single burst read transaction. A sample is one 6-byte sample from the FIFO and optionally one or two status bytes from registers 0x13 and 0x14 (a sample can be 6, 7, or 8-bytes long). Note this parameter is a sample count, not a byte count. If FIFO burst mode is disabled, this parameter is not used.