BAT54HT1G SCHOTTKY BARRIER DIODE

Features

- Low forward voltage
- Guard ring protected
- Small plastic SMD SOD-323 package

PINNING

PIN	DESCRIPTION
1	Cathode
2	Anode

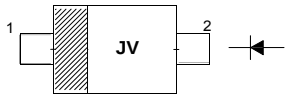

Top View
Marking Code: "**JV**"
Simplified outline SOD-323 and symbol

Applications

- Ultra high-speed switching
- Voltage clamping
- Protection circuits

Absolute Maximum Ratings (T_a = 25 °C)

Parameter	Symbol	Value	Unit
Reverse Voltage	V_R	30	V
Forward Current	I_F	200	mA
Repetitive Peak Forward Current	I_{FRM}	300	mA
Peak Forward Surge Current (t_p = 10 ms)	I_{FSM}	600	mA
Power Dissipation	P_D	230	mW
Thermal Resistance from Junction Ambient	R_{thJA}	500	K/W
Junction Temperature	T_J	125	°C
Storage Temperature Range	T_{stg}	- 65 to + 150	°C

Characteristics at T_a = 25 °C

Parameter	Symbol	Max.	Unit
Forward Voltage at I_F = 0.1 mA at I_F = 1 mA at I_F = 10 mA at I_F = 30 mA at I_F = 100 mA	V_F	 240 320 400 500 800	mV
Reverse Current at V_R = 25 V	I_R	2	µA
Total Capacitance at V_R = 1 V, f = 1 MHz	C_T	10	pF
Reverse Recovery Time at I_F = 10 mA, V_R = 6 V, I_R = 10 mA, R_L = 100 Ω	t_{rr}	6	ns

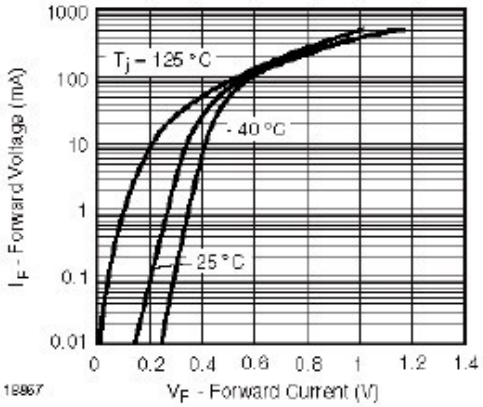

Figure 1. Typical Forward Voltage Forward Current at Various Temperatures

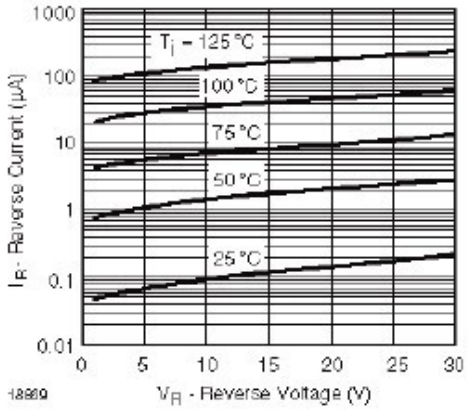

Figure 3. Typical Variation of Reverse Current at Various Temperatures

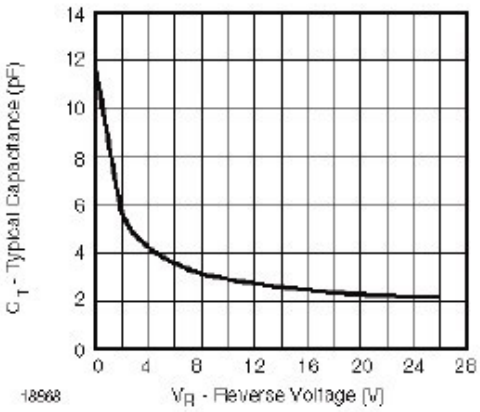

Figure 2. Typical Capacitance °C vs. Reverse Applied Voltage V_R

PACKAGE OUTLINE

Plastic surface mounted package; 2 leads **SOD-323**

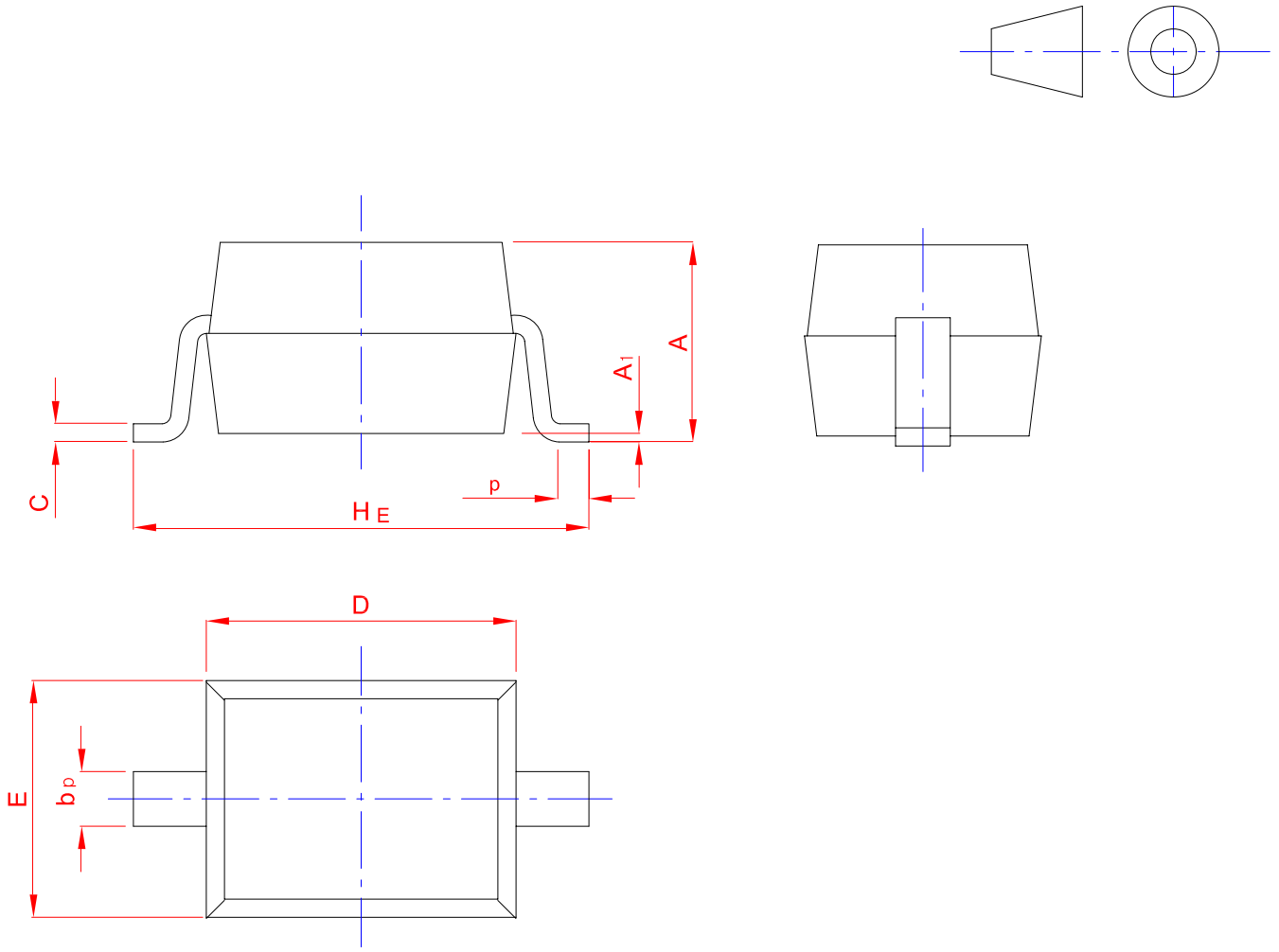

UNIT	A	b_p	C	D	E	H_E	A_1	L_p
mm	1.20 0.90	0.40 0.25	0.15 0.10	1.80 1.60	1.35 1.15	2.80 2.30	0.10 0.01	0.50 0.20