ROHS

REV.	ECN NO.	DESCRIPTION	DRAW	DATE

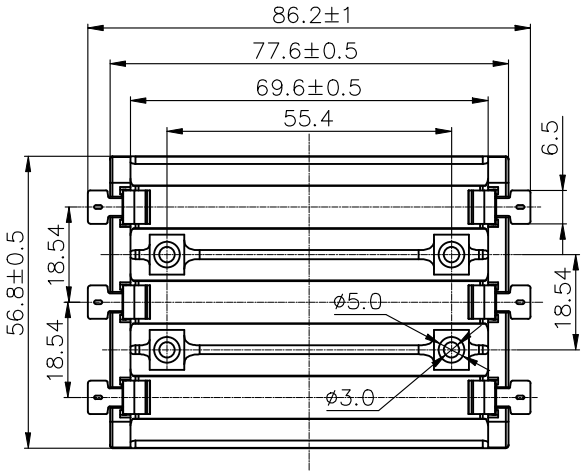

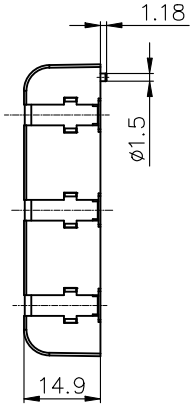

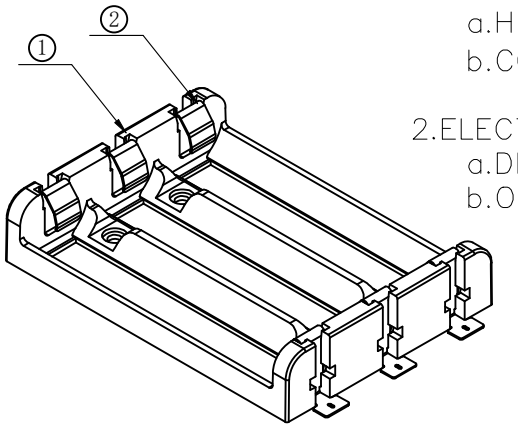

NOTE:

1.MATERIAL:

a.HOUSING: PA46 UL94 V-0 BLACK

b.CONTACTS: SUS304 T=0.35MM Au-Plating)

2.ELECTRIC:

a.DIELECTNIC VOLTAGE: 500V AC ONE MINUTE

b.OPERATING TEMPERATURE: -25°C~ +85°C

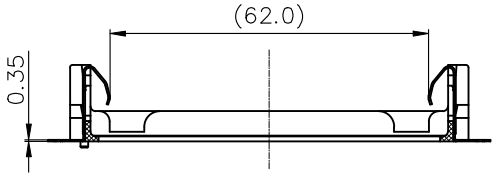

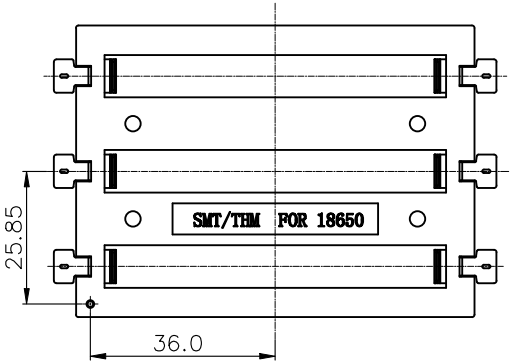

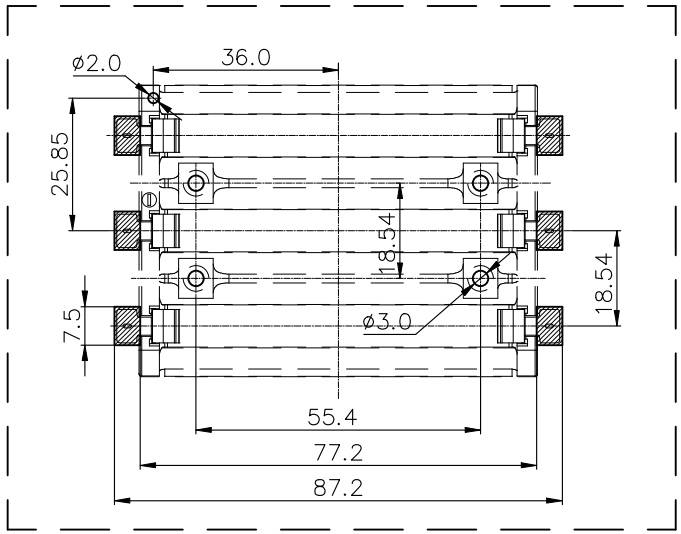

PCB Layout Diagram

Main View

NO.	PART NAME	Q'TY	MATERIAL	PLATING & COLOR
2	TERMINAL	6	SUS304 T=0.35mm	Au-Plating
1	HOUSING	1	PA46 UL94 V-0	BLACK

COSTOMER DRAWING

LAILAN 深圳市莱联电子有限公司

SHENZHEN LAILIAN ELECTRONICS CO.,LTD

DRAWING	
CHECK	
APPROVAL	

TOLERANCES ARE

30-150	±0.35	ANGLE
10-30	±0.2	
5-10	±0.15	±3°
0-5	±0.1	

TITLE	电池盒18650	REV.	A
PART NO.	LAIL-18650-BX4-SMT-5BA	UNITS	mm
DWG.NO.		Projection	