BLE52840 Module Datasheet V2.3

Beijing Jia An Electronics Technology Co., Ltd.

Contents

History 1

Module Name Information 2

Features.....3

Applications.....4

Description 4

Block Diagram 5

Specifications 5

Mechanical Drawing.....6

Terminal Description 7

Recommended PCB Layout for Package..... 10

Reference Schematics 11

Recommended Reflow Profile for Lead Free Solder 12

Package 13

Contact Details 14

History

Date	Version	Description	Draft	Approval
2019-12-19	V1.0	Release		
2020-3-3	V2.0	Change of format	X	Amy
2020-9-29	V2.1	Change the Mechanical Drawing	ZXY	
2020-11-2	V2.2	Change the Pad Number	X	
2025-7-23	V2.3	Update Contact Details	Keystone	Jessy

Module Name Information

BLE - 52840 - SA - B

BLE	52840	SA	B
Module Type: Bluetooth	Chip Type: nRF52840	Antenna Type: SA: Strip antenna UA: UFL Connector	PCB Version

Features

- Bluetooth® 5, IEEE 802.15.4-2006, 2.4 GHz transceiver
  - -95 dBm sensitivity in 1 Mbps Bluetooth® low energy (BLE) mode
  - -103 dBm sensitivity in 125 kbps BLE mode (long range)
  - +7 dBm TX power (down to -20 dBm)
  - Supported data rates:
  - Bluetooth® 5: 2 Mbps, 1 Mbps, 500 kbps and 125 kbps
  - IEEE 802.15.4-2006: 250 kbps
  - Proprietary 2.4 GHz: 2 Mbps, 1 Mbps
  - 128-bit AES/ECB/CCM/AAR co-processor (on-the-fly packet encryption)
  - 36 mA peak current in TX (6dBm)
  - 4.6 mA peak current in RX
- ARM® Cortex®-M4 32-bit processor with FPU, 64 MHz
  - 212 EEMBC CoreMark score running from flash memory
  - 52 µA/MHz running from flash memory
  - Watchpoint and trace debug modules (DWT, ETM and ITM)
  - Serial wire debug (SWD)
- Rich set of security features
  - ARM® TrustZone® Cryptocell 310 security subsystem
- NIST SP800-90A and SP800-90B compliant random number generator
- AES-128: ECB,CBC,CMAC/CBC-MAC, CTR,CCM/CCM*
- Chacha20/Poly1305 AEAD supporting 128- and 256-bit key size
  - SHA-1, SHA-2 up to 256 bits
- Keyed-hash message authentication code (HMAC)
  - RSA up to 2048-bit key size
  - SRP up to 3072-bit key size
- ECC support for most used curves, among others P-256 (secp256r1) and Ed25519/Curve25519
- Application key management using derived key model
- Secure boot ready
  - Flash access control list (ACL)
  - Root-of-trust (RoT)
  - Debug control and configuration
  - Access port protection (CTRL-AP)
- Secure erase
- Flexible power management
  - 1.7 V-5.5 V supply voltage range
  - Fast wake-up using 64 MHz internal oscillator, 32.768KHZ external oscillator
  - 0.4 µA at 3 V in System OFF mode, no RAM retention
  - 1.5 µA at 3 V in System ON mode, no RAM retention, wake on RTC
- 1 MB flash and 256 kB RAM
- Advanced on-chip interfaces
  - USB 2.0 full speed (12 Mbps) controller
  - QSPI 32 MHz interface
  - High-speed 32 MHz SPI
  - Type 2 near field communication (NFC-A) tag with wake-on field
  - Touch-to-pair support
  - Programmable peripheral interconnect (PPI)
  - 48 general purpose I/O pins
  - EasyDMA automated data transfer between memory and peripherals
- 12-bit, 200 ksps ADC - 8 configurable channels with programmable gain
- 64 level comparator
- 15 level low-power comparator with wake-up from System OFF mode
- Temperature sensor
- 4x 4-channel pulse width modulator (PWM) unit with EasyDMA
- Audio peripherals: I2S, digital microphone interface (PDM)
- 5x 32-bit timer with counter mode
- Up to 4x SPI master/3x SPI slave with EasyDMA
- Up to 2x I2C compatible 2-wire master/slave

- 2x UART (CTS/RTS) with EasyDMA
- Quadrature decoder (QDEC)
- 3x real-time counter (RTC)

Applications

- Advanced computer peripherals and I/O devices
- Mouse
- Keyboard
- Multi-touch trackpad
- Advanced wearables
- Health/fitness sensor and monitor devices
- Wireless payment enabled devices
- Internet of things (IoT)
- Smart home sensors and controllers
- Industrial IoT sensors and controllers
- Interactive entertainment devices
- Remote controls
- Gaming controllers

Description

The BLE52840 module is designed based on nRF52840. The nRF52840 is fully multiprotocol capable with full protocol concurrency. It has protocol support for Bluetooth 5, Bluetooth mesh, Thread, Zigbee, 802.15.4, ANT and 2.4 GHz proprietary stacks. The nRF52840 is built around the 32-bit ARM® Cortex™-M4 CPU with floating point unit running at 64 MHz. It has NFC-A Tag for use in simplified pairing and payment solutions. The ARM TrustZone® CryptoCell cryptographic unit is included on-chip and brings an extensive range of cryptographic options that execute highly efficiently independent of the CPU. It has numerous digital peripherals and interfaces such as high speed SPI and QSPI for interfacing to external flash and displays, PDM and I2S for digital microphones and audio, and a full speed USB device for data transfer and power supply for battery recharging. Exceptionally low energy consumption is achieved using a sophisticated on-chip adaptive power management system.

Block Diagram

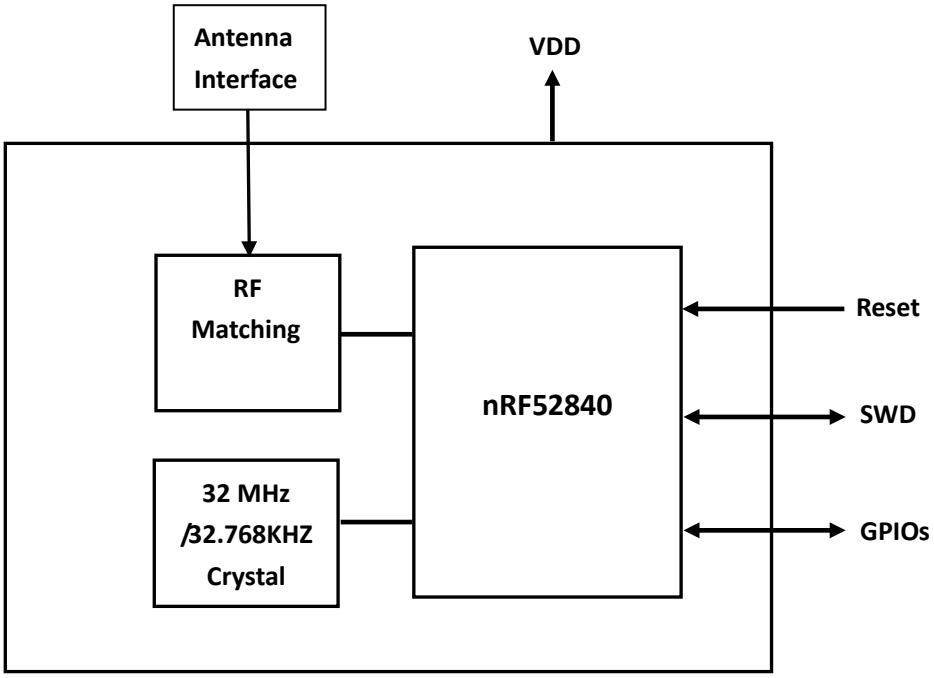

Specifications

Parameter		Min	Typ	Max	Unit
Operating Voltage		1.7	3.3	5.5	V
Operating Temperature		-20	-	+70	℃
Current Consumption	Sleep Mode	-	1.5	-	uA
	Receive mode	-	4.6	-	mA
	Transmit Mode (@6dBm)	-	36	-	mA
TX Power (For Carrier)		-	-	6	dBm
RX Sensitivity (For Lora Modulation)		-	-	-103	dBm
Distance		180			m

Mechanical Drawing

BLE52840SA-B:

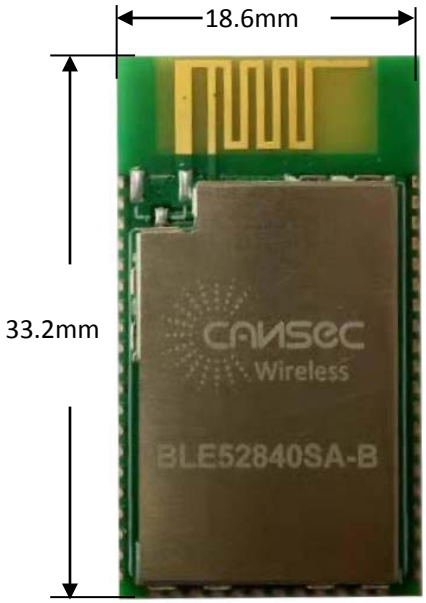

Terminal Description

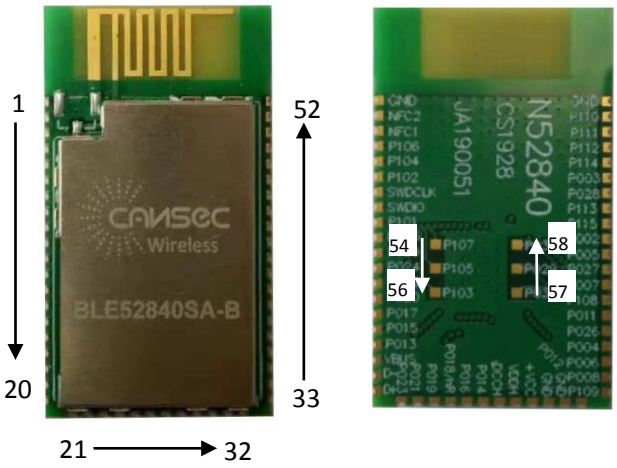

Pad Number	Name	Pin Type	Description
1	GND	Ground Pin	Connect to GND
2	P1.10	Digital I/O	General purpose I/O
3	P1.11	Digital I/O	General purpose I/O
4	P1.12	Digital I/O	General purpose I/O
5	P1.14	Digital I/O	General purpose I/O
6	P003 AIN1	Digital I/O Analog input	General purpose I/O Analog input
7	P0.28 AIN4	Digital I/O Analog input	General purpose I/O Analog input
8	P1.13	Digital I/O	General purpose I/O
9	P1.15	Digital I/O	General purpose I/O
10	P0.02 AIN0	Digital I/O Analog input	General purpose I/O Analog input
11	P0.05 AIN3	Digital I/O Analog input	General purpose I/O Analog input
12	P0.27	Digital I/O	General purpose I/O
13	P0.07 TRACECLK	Digital I/O Trace clock	General purpose I/O Trace buffer clock
14	P1.08	Digital I/O	General purpose I/O
15	P0.11 TRACEDATA2	Digital I/O Trace data	General purpose I/O Trace buffer TRACEDATA[2]
16	P0.26	Digital I/O	General purpose I/O

17	P0.04 AIN2	Digital I/O Analog input	General purpose I/O Analog input
18	P0.06	Digital I/O	General purpose I/O
19	P0.08	Digital I/O	General purpose I/O
20	P1.09 TRACEDATA3	Digital I/O Trace data	General purpose I/O Trace buffer TRACEDATA[3]
21	P0.12 TRACEDATA1	Digital I/O Trace data	General purpose I/O Trace buffer TRACEDATA[1]
22	GND	Power	Ground
23	GND	Power	Ground
24	+VCC	Power	Power supply
25	VDDH	Power	High voltage power supply
26	DCCH	Power	DC/DC converter output
27	P0.14	Digital I/O	General purpose I/O
28	P0.16	Digital I/O	General purpose I/O
29	P0.18 nRESET	Digital I/O RESET	General purpose I/O Configurable as system RESET
30	P0.19	Digital I/O	General purpose I/O
31	P0.21	Digital I/O	General purpose I/O
32	P0.23	Digital I/O	General purpose I/O
33	D+	Digital I/O	USB D+
34	D-	Digital I/O	USB D-
35	VBUS	Power	5 V input for USB 3.3 V regulator
36	P0.13	Digital I/O	General purpose I/O
37	P0.15	Digital I/O	General purpose I/O
38	P0.17	Digital I/O	General purpose I/O
39	P0.20	Digital I/O	General purpose I/O
40	P0.22	Digital I/O	General purpose I/O
41	P0.24	Digital I/O	General purpose I/O
42	P1.00 TRACEDATA0	Digital I/O Trace data	General purpose I/O Trace buffer TRACEDATA[0] Serial wire output (SWO)
43	P0.25	Digital I/O	General purpose I/O
44	P1.01	Digital I/O	General purpose I/O
45	SWDIO	Debug	Serial wire debug I/O for debug and programming
46	SWDCLK	Debug	Serial wire debug clock input for debug and programming
47	P1.02	Digital I/O	General purpose I/O

48	P1.04	Digital I/O	General purpose I/O
49	P1.06	Digital I/O	General purpose I/O
50	P0.09 NFC1	Digital I/O NFC input	General purpose I/O NFC antenna connection
51	P0.10 NFC2	Digital I/O NFC input	General purpose I/O NFC antenna connection
52	GND		
53	P1.07	Digital I/O	General purpose I/O
54	P1.05	Digital I/O	General purpose I/O
55	P1.03	Digital I/O	General purpose I/O
56	P0.31 AIN7	Digital I/O Analog input	General purpose I/O Analog input
57	P0.29 AIN5	Digital I/O Analog input	General purpose I/O Analog input
58	P0.30 AIN6	Digital I/O Analog input	General purpose I/O Analog input

Recommended PCB Layout for Package

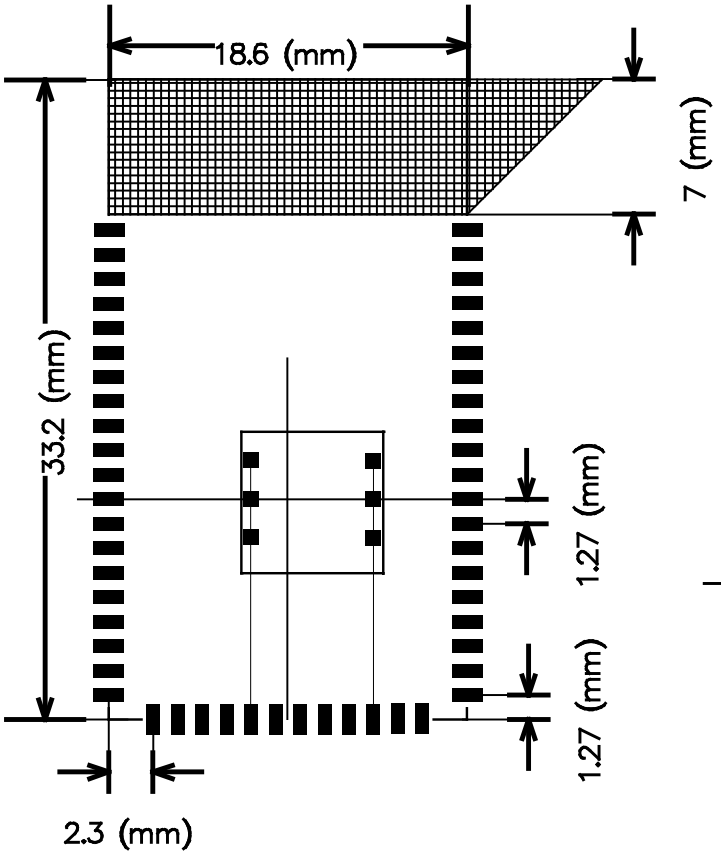

NOTE: If using the PCB antenna please make sure in the shadow area shall without any wiring or ground.

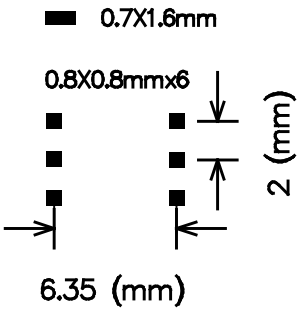

Reference Schematics

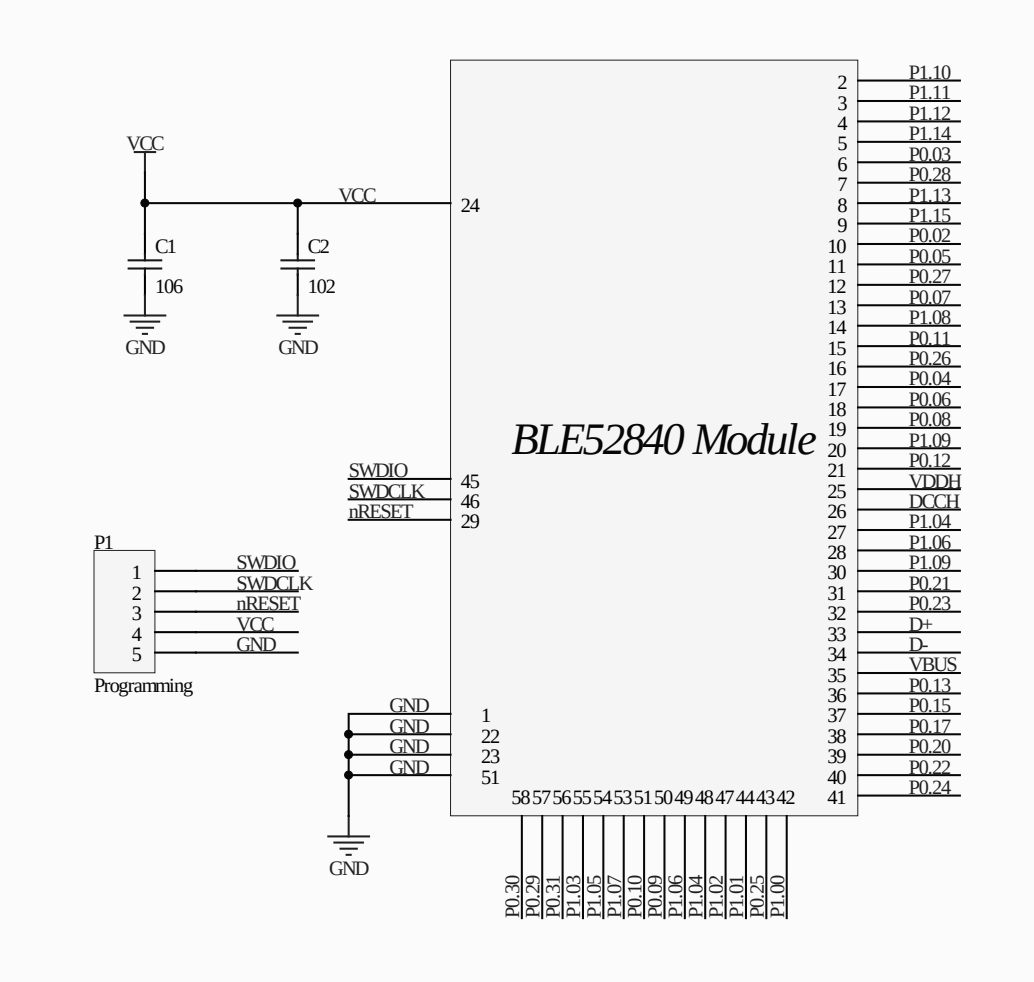

Recommended Reflow Profile for Lead Free Solder

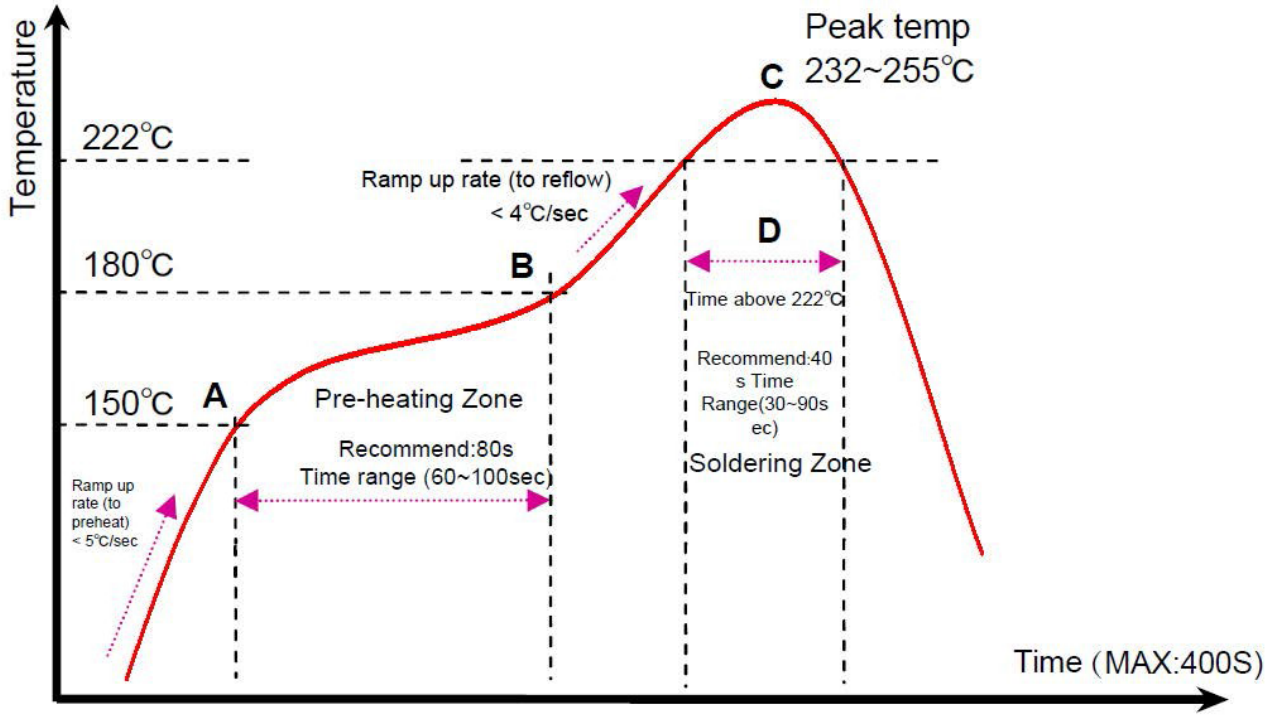

Package

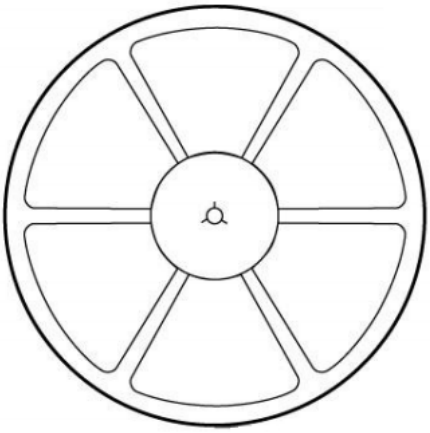

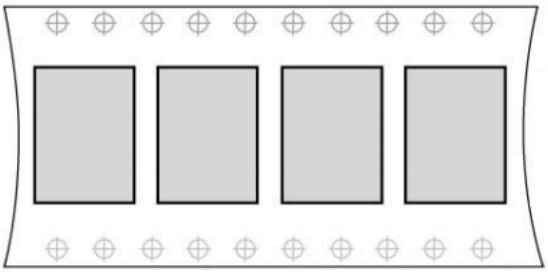

- Tape and Reel
- Helical antenna version Module exception
- Note：For package, we have three package types: Reel, Tray, Simple way for choosing, depend on customer's request or quantity request

Contact Details

Tel: +86-10-6888 9971

Email: sarolyn@rf-products.com
grace@rf-products.com
norman@rf-products.com

Technical Support: tech@rf-products.com

Addr: Rm.1002, Block B China Railway Venture building, No.28 Pingguoyuan Rd., Shijingshan District, Beijing, 100041,China.

Website: www.rf-products.com