REVISIONS (修正)			
NO.（序号）	DESCRIPTION(描述)	DCN NO.(变更号)	DATE(日期)
D.0	NEW RELEASE		

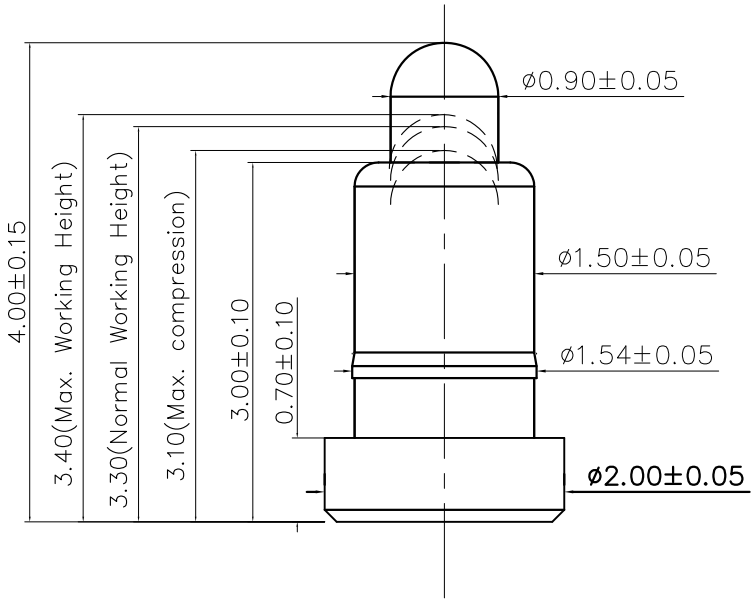

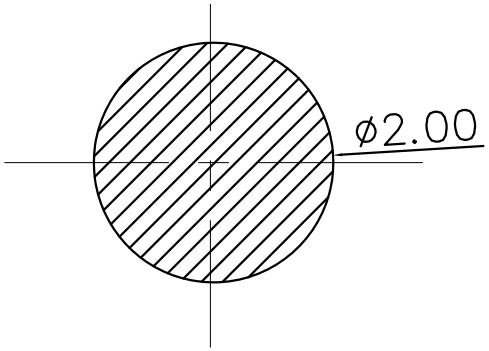

RECOMMEND PCB LAYOUT

Layout Tolerance: ±0.05mm

NOTE;

1.Material
- Plunger: C3604
- Barrel: C3604
- Spring: SUS

2.Plating
- Plunger: 3 micro-inch minimum Au over 50~100 micro-inch nickel
- Barrel : 3 micro-inch minimum Au over 50~100 micro-inch nickel

3.Electrical
- Rated current & voltage: DC12V; 1A.
- Contact resistance: 100 mohm maximum at working height(quiescence)

4.Mechanical
- Spring force: 90g±25g at Normal working height
- Durability: 10,000 cycles(minimum)

5.When the current is greater than 2A then need to increase the time delaycircuit(3 second)

6.To ensure the best usage,please operate it based on the working height
- Based on the engineering drawings,shall not exceed the maximum allowed compression

7.Products comply with ROHS standards

DRAW (设计)	LIAOYI	SCALE (比例)	10 : 1	UNIT (单位)	mm	DRAWING NO. (图号)	KTR40003UT01-R
COUNTER SIGN (会签)		SHEET (页数)	1 of 1	PROJECT (视图)		MATERIAL (材质)	Seeing notes（见备注）
AUDIT (审核)		DATE (日期)	2023.11.24	VER (版次)	D.0	TITLE (品名)	Pogo pin
APPROVE (核准)		PLATE (镀层)	Seeing notes(见备注)				

THE UNMARKED TOLERANCE ARE AS BELOW :
(未标记的公差)

LENGTH（尺寸）		ANGLE（角度）	
0~6.0	±0.05mm	0.	±2.0°
>6~30	±0.10mm	0.0	±1.0°
>30~120	±0.15mm	0.00	±0.50°

东莞市柯睿电子有限公司

Dong Guan KeRui Electronics Co,Ltd

The information in this document is property of KeRui company and should not be copied or reproduced in any other way, without written permission.