XL-IRM1838DS 贴片红外接收头 技术数据表 Technical Data Sheet

简介：

模型图仅供参考

该产品内含高速高灵敏度PIN光电二极管和低功耗、高增益前置放大IC,采用环氧树脂塑封半圆球型封装及内、外双重屏蔽抗干扰设计，该产品已经通过 REACH 和 ROHS 认证属于环保产品，在红外遥控系统中作为接收器使用。

This product contains a high-speed and high sensitivity pin photo diode and Low power consumption, high gain Preamplifier Ic Adopting epoxy resin plastic encapsulated semi circular spherical packaging Dual shielding and anti-interference design for both inside and outside,This product has been certified by Reach and Rohs as an environmentally friendly product, Used as a receiver in infrared remote control systems

特点（characteristic）：

*大体积环氧塑封半球型封装，及内、外双重屏蔽抗干扰设计；
Large-volume epoxy plastic-sealed hemispherical package with dual shielding (internal and external) for interference resistance;
*外观尺寸（长*宽*高*引脚长）：6.7*7.9*6.2*4.0mm
Appearance dimension（length * width * height* foot length）: 6.7*7.9*6.2*4.0mm.
* 宽工作电压，2.7-5.5V；
Wide working voltage, 2.7-5.5v;
* 低功耗；宽角度及长距离接收；
Low power consumption; Wide angle and long-distance reception ;
* 能抵挡环境干挠；
withstand environmental interference
* 输出匹配 TTL、CMOS 电平，低电平有效；
Output matching TTL, CMOS level, low level effective

应用领域（product application）：

* 家用电器（空调、风扇、暖风机、加湿器）；
Household appliances (air conditioning, fans, heaters, humidifiers)
* 多媒体视听设备（电视、DVD、机顶盒、车载移动DVD、硬盘播放器）；
Multimedia audiovisual equipment (TV, DVD, set-top box, car mounted mobile DVD, hard drive player
* 电脑及周边设备，感应洁具；
Computers and peripheral equipment, induction sanitary ware
* 工业控制（仪表，工业自动化）；
Industrial Control (Instrumentation, Industrial Automation
* 遥控玩具，通讯器材，照相器材，事务机器，
Remote control toys, communication equipment, photography equipment, office machines;
* 金融电子，汽车电子，灯饰照明；
Financial Electronics, Automotive Electronics, Lighting

目录
Catalogue

电性参数
Electrical Characteristics.....3

典型特性曲线
Typical Characteristic Curves.....7

可靠性实验
Reliability Test Items And Conditions.....8

外形尺寸
Outline Dimensions.....9

包装
Packaging.....10

使用注意事项
Precautions.....11

电性参数

Electrical Characteristics

极限参数（Absolute Maximum Ratings）（Ta=25℃）

参数名称 Parameter	符号 Symbol	数值 Rating	单位 Unit
供应电压 Supply Voltage	VDD	6.0	V
工作环境温度 Operating ambient temperature	Topr	-20°C～+85°C	
储存环境温度 Storage ambient temperature	Tstg	-40°C～+125°C	
焊接条件 Welding conditions	Tsol	波峰焊（Wave soldering）：240℃，≦6s 手动焊（manual welding ）：300℃，3s	

光电参数（Initial Electrical Optical Characteristics）（Ta=25℃）

项目参数 Parameter	符号 Symbol		最小值 Min.	一般值 Typ.	最大值 Max.	单位 Unit	测试条件 Test conditions
工作电流 Working current	ICC		0.18	0.24	0.32	mA	VDD=5V
接收距离 receive distance	L	0°	15	17	-	M	/
	L	左35°	6	8	-	M	
	L	右35°	6	8	-	M	
载波频率 Carrier Frequency	F_o		-	37.9	-	KHZ	/
BPF宽度 BPF width	F_{BW}		-	3.8	-	KHZ	/
低电平输出 Low level output	V_{OL}		-	-	250	mV	Isink=2.0mA
高电平输出 High level output	V_{OH}		4.5	-	5.0	V	VCC=5V
输出脉冲宽度 Pulse width	T_{PWL}		450	600	700	us	burst wave Vin=500UVp-p
	T_{PWH}		450	640	700	us	burst wave Vin=50mVp-p
最小脉冲宽度 Minimum pulse width	T_{burst}		300	-	-	us	Vin=50mVp-p
最小间隔时间 Minimum interval	$T_{burst\ gap}$		350	-	-	us	Vin=50mVp-p
编码停顿时间 Encoding pause time	T_{pause}		45	-	-	us	Vin=50mVp-p

*发射为CH3018-12U,室内无阳光直射接收窗，前上方1M置40W电子整流日光灯干扰，灯光强度为200±50Lux.

推荐使用条件（Recommended usage conditions）：

项目参数 Parameter	符号 Symbol	最小值 Min.	一般值 Typ	最大值 Max.	单位 Unit
供应电压 Supply Voltage	VDD	2.7	-	5.5	V
输入频率 input frequency	FM	-	37.9	-	KHZ
工作环境温度 Operating temperature	Topr	-20° C ~ +85° C			°C

应用电路图（Application circuit diagram）：

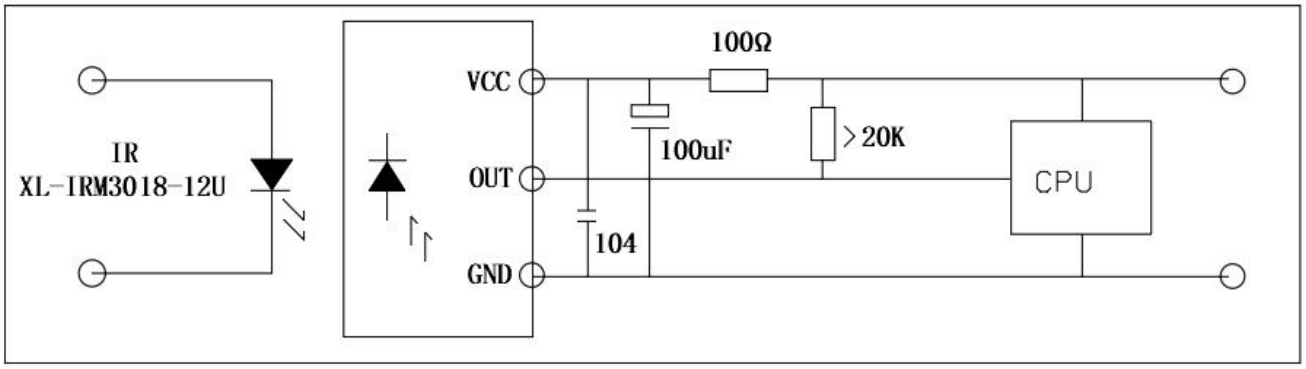

原理图（schematic diagram）：

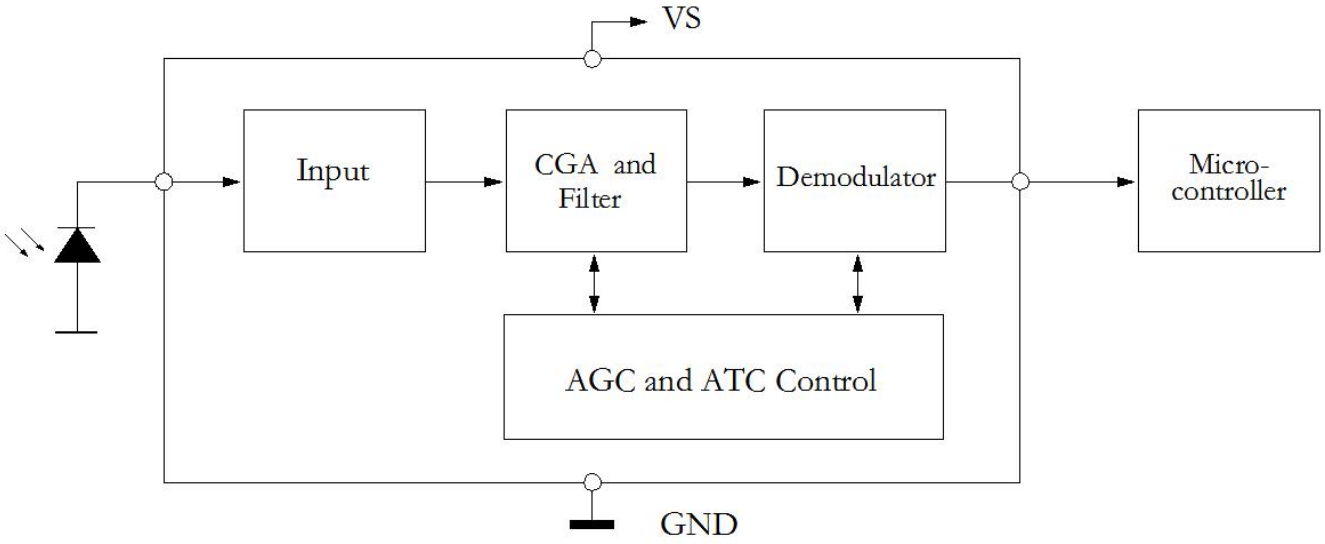

接收角度测试方式（Receiving angle testing method ）：

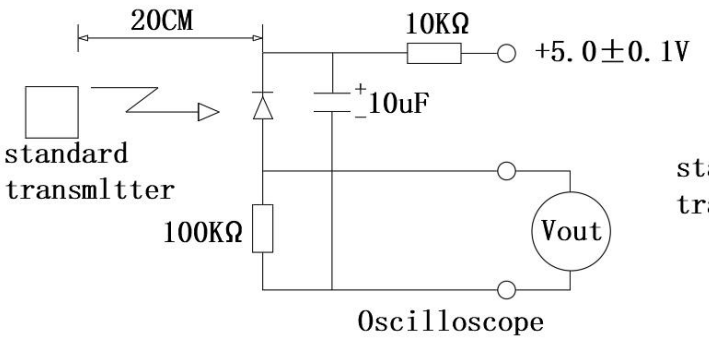

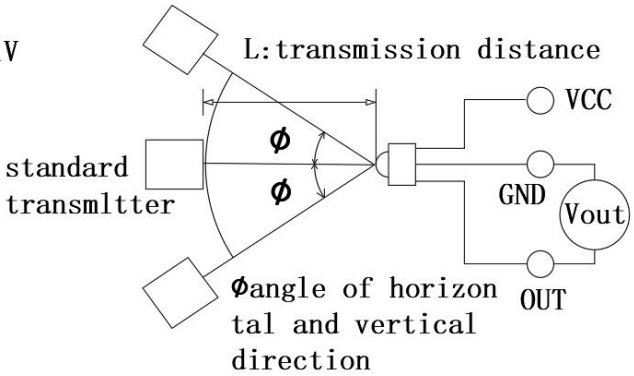

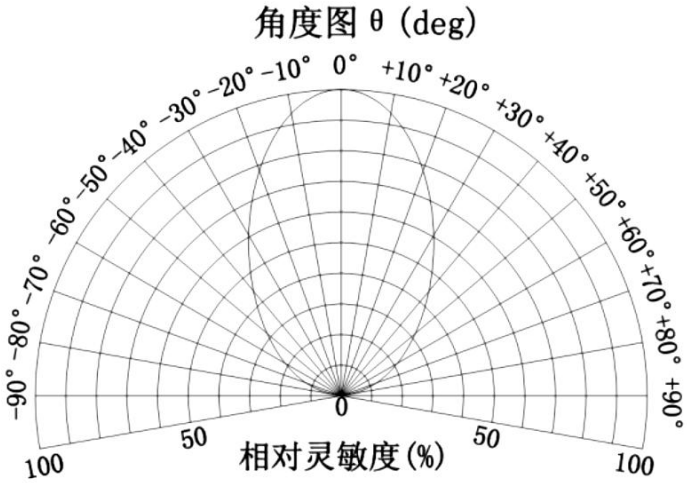

接收距离分档:
Receive distance grading:

代码 Code	最小值 Min	最大值 Max	单位 Unit	测试条件 Test conditions
L1	6	8	M	ICC=0.25mA
L3	15	20		

典型特性曲线

Typical Characteristics Curves

测试波形（Test waveform）：

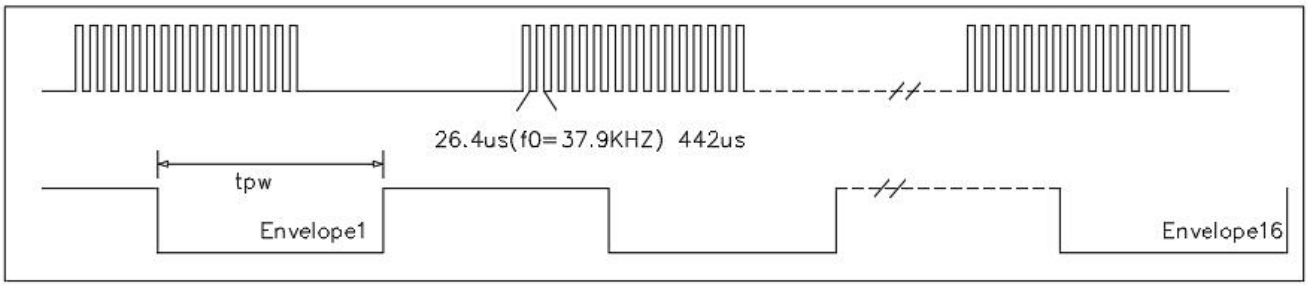

Figure 4. Typical Bandpass Curve

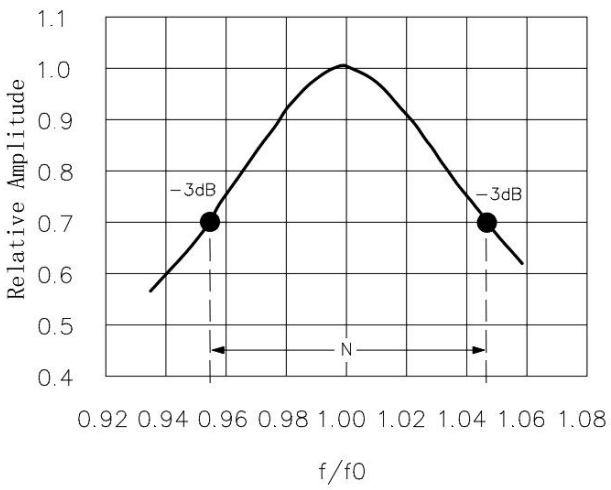

Figure 4. Supply Current VS supply voltage

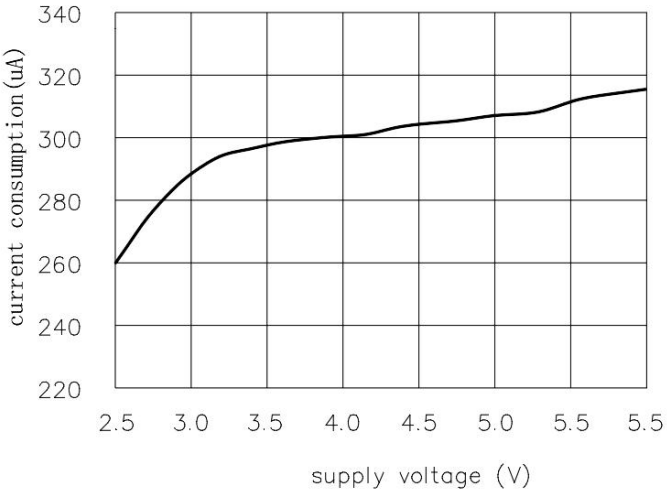

可靠性试验

Reliability Test Items And Conditions

*可靠性实验项目（Reliability Test Project）

测试项目	测试条件	测试时间	测试数量	合格数
焊接耐热温度	温度260℃±5℃（非受力状态下）	5秒以内	20	20
静电破坏实验	电容100PF，电阻1.5KΩ， 静电电压4KV,各引脚		20	20
振动实验	频率：10-50HZ/1min 振幅：1.5mm X、Y、Z/30min	30分钟	20	20
高温储存	温度85℃±2℃	240小时	20	20
低温储存	温度-20℃±2℃	240小时	20	20
高温高湿储存	温度85℃；湿度85%	240小时	20	20
高低温循环	低温-20℃（30秒） 高温+85℃（30秒）	10个循环	20	20
引脚弯曲	用2.5N的外力对每个引脚弯曲2次		20	20

外形尺寸

Outline Dimension

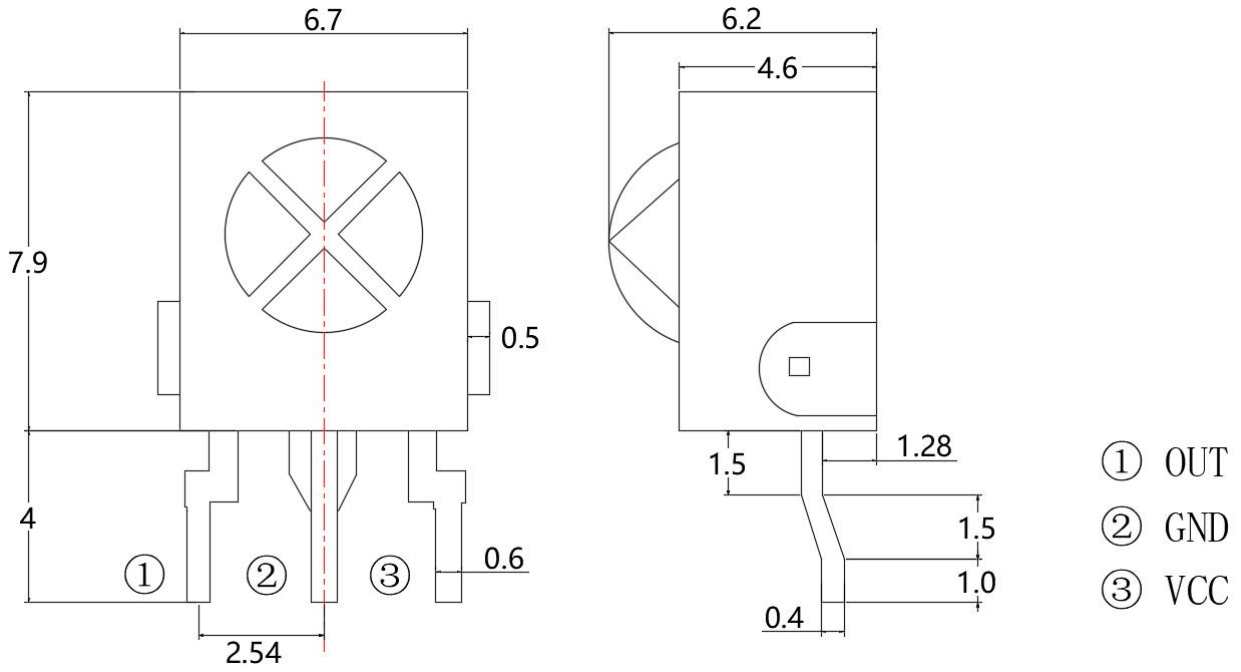

备注(Note)：

1. 标注尺寸单位为毫米

Dimensions are in millimeters.

2. 除特别标注外，所有尺寸允许公差± 0.25㎜ .

Tolerances unless mentioned are ± 0.25mm.

包装

Packaging

*袋装

In Bags

*防潮抗静电包装

Moisture Proof and Anti-Electrostatic Foil Bag

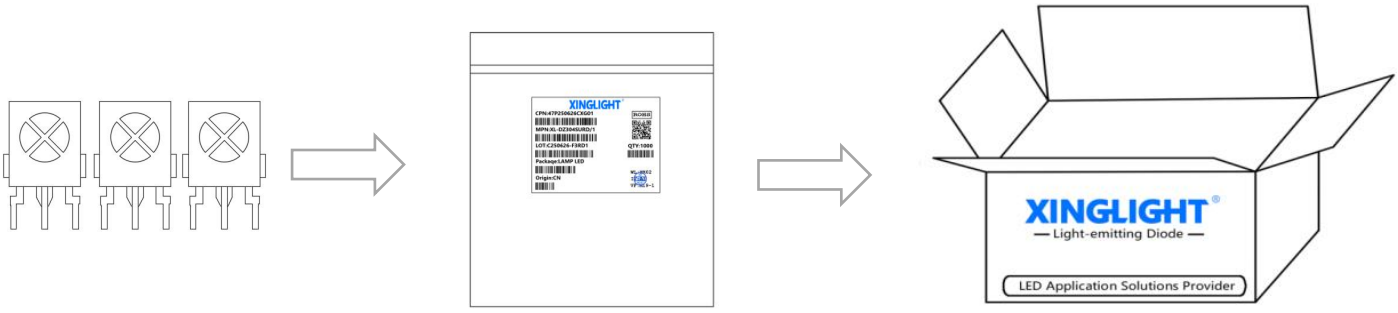

◇ 标签说明 Label Expantion

CPN：批号/档位	LOT：日期
MPN：型号	VF：电压
QTY：数量	M：接收距离
ORIGIN：产地	MA：电流
PACKAQE：封装	

使用注意事项（1）

Precautions (1)

1、应用 APPLY

此红外接收头可使用于一些普通的电子设备，例如办公设备，通信设备、房屋装饰，若LED用在一些可靠性要求较高的情况下，如航空运输，交通控制及医辽器械时，一定需参考销售提供之资料进行使用。

This Infrared receiver head can be used in some ordinary electronic equipment, such as office equipment, communication equipment, house decoration, if LED is used in some high reliability requirements, such as air transportation, traffic control and medical liao equipment, must refer to the information provided by sales.

2、储存 Keep in storage

贮存红外接收头的环境，温度不超过85℃，相对湿度不超过70%。 建议红外接收头在原包装箱里日期不超过三个月进行使用，如果需加长贮存时间，建议放在干燥箱内，并加放干燥剂， 或者充入氮气。

Storage environment of Infrared receiver head with temperature not exceeding 30℃ and relative humidity not exceeding 70%.It is recommended that Infrared receiver head be used in the original box for no more than three months. If longer storage time is required, put it in the drying box and add desiccant or filled with nitrogen.

3. 清洗 Clean

当用化学品清洗胶体时必须特别小心，因为有些化学品对胶体表面有损伤并引起褪色如三氯乙烯、丙、酮等。可用乙醇擦拭、浸渍，时间在常温下不超过3分钟。

Special care must be taken when cleaning colloids with chemicals, as some chemicals have damage to the colloidal surface and cause fading such as trichloroethylene, propylene, ketone, etc.It can be wiped and soaked with ethanol for no more than 3 minutes at room temperature.

4. 引脚配置 Feet assembly

（1）必需离胶体2毫米才能折弯支架。

It must be 2 mm from the colloid to bend the bracket.

（2）支架成形必须用夹具或由专业人员来完成。

Support forming must be done with fixtures or by a professional.

（3）支架成形必须在焊接前完成。

Support forming must be completed before welding.

（4）支架成形需保证引脚和间距与线路板上一致。

The pins and spacing are the same as on the circuit board.

（5）焊接必须在正常温度下进行，当LED正常焊接到PCB板上后，应尽量避免在红外接收头引脚处施加机械压力。Welding must be performed at normal temperature and when Infrared receiver head is normally welded to the PCB plate, avoid applying mechanical pressure at LED pins at a minimum.

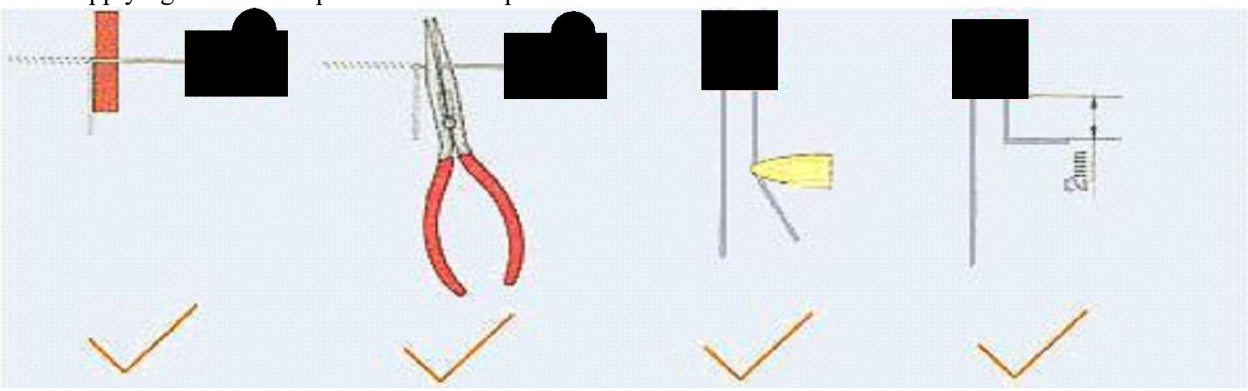

使用注意事项（2）

Precautions (2)

5. 焊接 Weld

当焊接时，必需在胶体底部2mm以下进行焊接，在焊接时，应尽力避免浸渍红外接收头胶体，在刚焊接完后，应避免在引脚上加外力或者摇动红外接收头胶体。

When welding, welding must be conducted below 2mm of colloid bottom. When welding, try to avoid soaking Infrared receiver head colloid. After welding, avoid adding external force on the pin or shaking Infrared receiver head colloid.

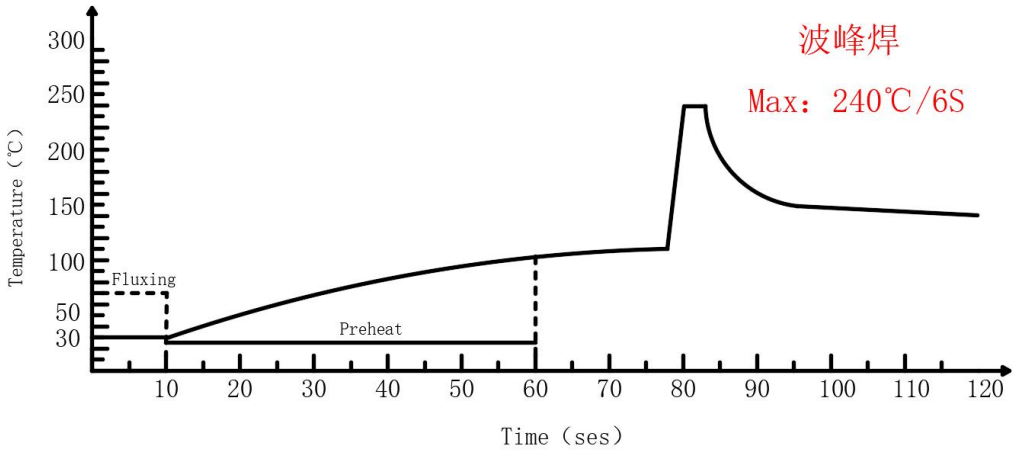

6. 静电防护 Electrostatic protection

静电和电流的急剧升高将会对红外接收头产生损害，InGaN系列产品使用时请使用防静电装置，如防护带和手套注意：使用时人体放电模式HBM<1000V；机器放电模式<100V。

High increase of static electricity and current will damage Infrared receiver head. Use antistatic devices such as protective belts and gloves. Note: human discharge mode HBM <1000V; machine discharge mode <100V.

7、**灵敏度：**同一款产品，可以在不同设备上，不同的环境中测量出来的实际数据也不同。 在不同的环境中，应注意周围环境的干扰，光的干扰和不同的光强，对红外线接收头的灵敏度有影响。

Sensitivity:The same product can be used on different devices,The actual data measured in different environments also varies.In different environments,Attention should be paid to the interference of the surrounding environment ,Interference of light and different light intensities ,Has an impact on the sensitivity of the infrared receiver head .

8、红外线接收头应该有一个滤光片来过滤掉白光，因为强光直射红外线接收头，有电磁干扰，有频闪光源和强红外热源等环境条件下红外接收头会影响接收。

The infrared receiver head should have a filter to filter out white light。Because, the strong light direct infrared receiving head， Electromagnetic interference， Equipped with stroboscopic light source and strong infrared heat source Under equal environmental conditions Infrared receiver head will affect reception

使用注意事项（3）

Precautions (3)

9、其他事项：

不要对红外接收头的引脚施加不必要的外力；注意保护红外接收头的接收表面，沾污会影响接收功能。

Do not apply unnecessary external force to the pins of the infrared receiver head ；Pay attention to protecting the receiving surface of the infrared receiver head，Staining can affect reception function。

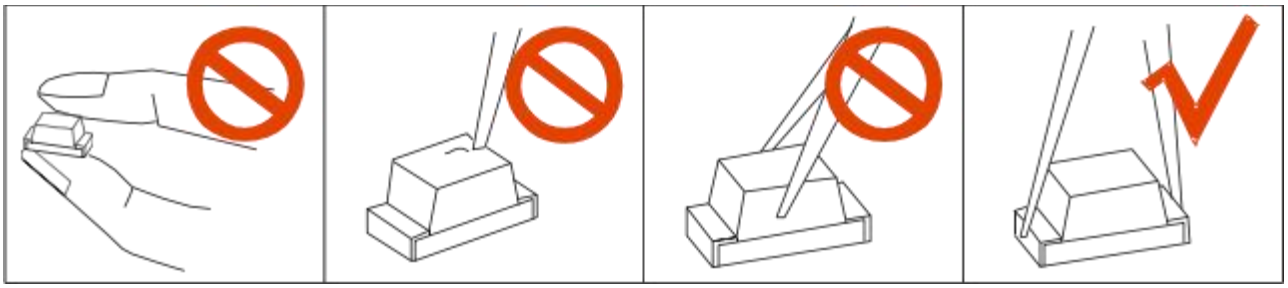

规格书如有修改，不另行通知

If there are any modifications to the specification sheet, no further notice will be given