REVISIONS					
REV.	ECN NO.	LOCATION	DESCRIPTION	DATE	DESIGN
A0	N/A		INITIAL RELEASE	/	/
A1	N/A		图面升级整理图面	2025.06.24	阿树

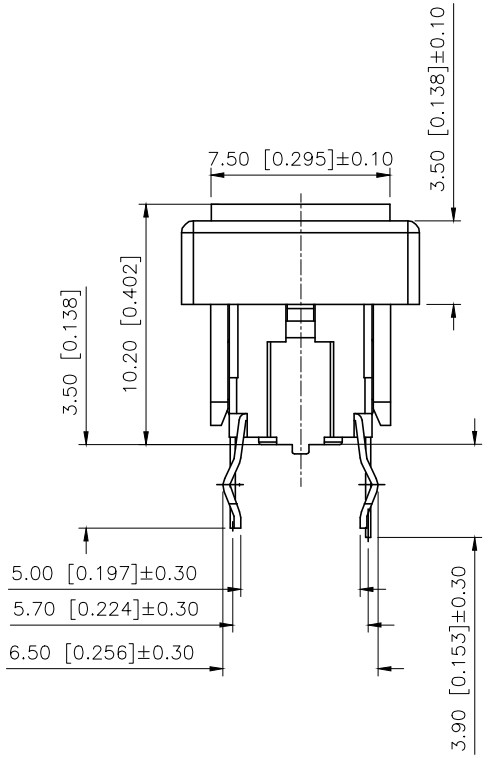

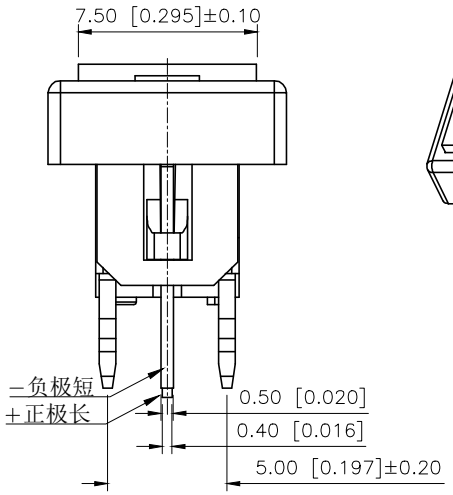

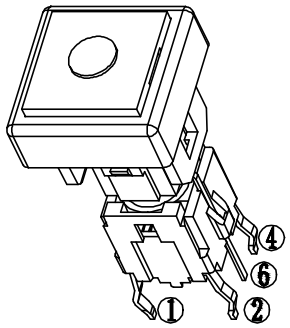

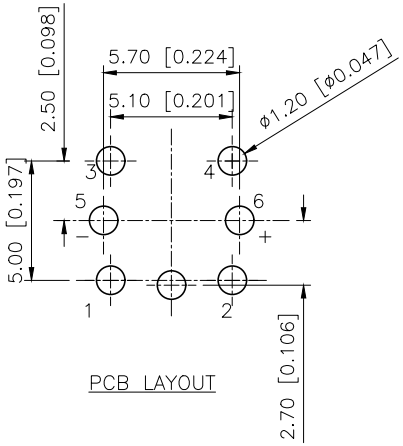

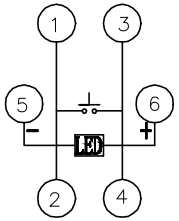

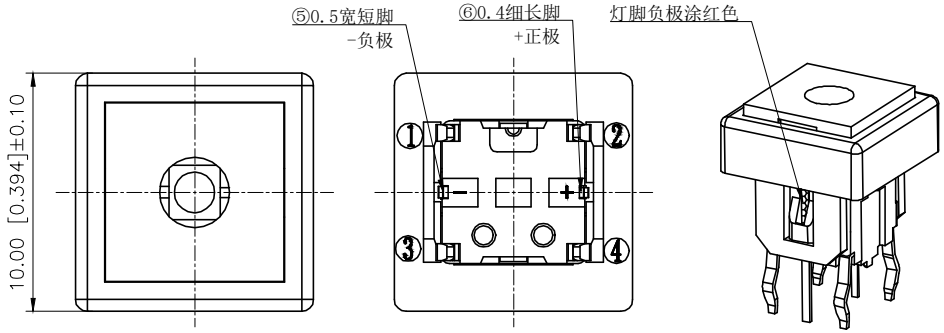

Led Color	Part No	VR	IF	Recommended Operating	IF	
					Nom	Max
White	TM−001−D4−01	DC5V	20mA	20mA	3.0V	3.6V
Red	TM−001−D4−02	DC5V	20mA	20mA	1.7V	2.4V
Blue	TM−001−D4−03	DC5V	20mA	20mA	3.0V	3.6V
Green	TM−001−D4−04	DC5V	20mA	20mA	1.9V	2.4V
Yellow	TM−001−D4−05	DC5V	20mA	20mA	1.9V	2.4V

ITEM	PAPT NAMF	QTY	MATERIAL	FINISHING
7	LED	1		
6	Hat	1	ABS	Ag Plated
5	Terminal	4	Brass（0.30t）	
4	Contact	1	F.ag/SUS	
3	Base	1	PA66	
2	Cover	1	PA66	
1	Keystake	1	PA66	

AuGLAR	±5°
X.	±0.40
X.x	±0.30
X.xx	±0.20
X.xxx	±0.15
UNSPECIFIED TOLERAuCES	

XKB Connection 星城

DESIGN	阿树	VIEW:	MODEL TYPE: LED SWITCH
CHECKED		UNIT: mm/in	PART NO.: TM−001−D4−01
APPROVED		SIZE: A4	DWG NO.: X−TM−001−D4−01

XKB INDUSTRIAL PRECISION CO.,LIMITED

SCALE	PAGE	REVISION
N/A	1/1	A1