REVISIONS					
REV.	ECN NO.	LOCATION	DESCRIPTION	DATE	DESIGN
A0	N/A		INITIAL RELEASE	/	/
A1	N/A		图面升级整理图面	2025.06.21	阿树

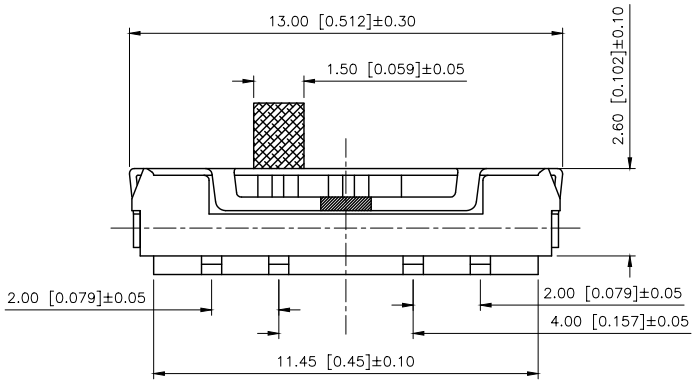

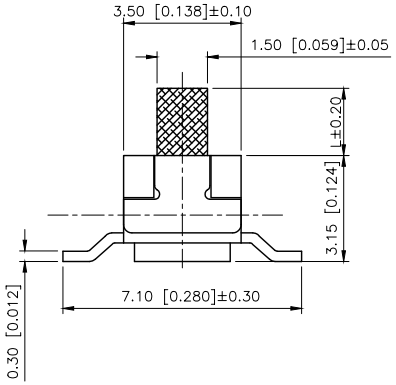

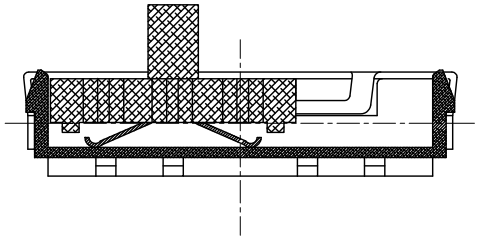

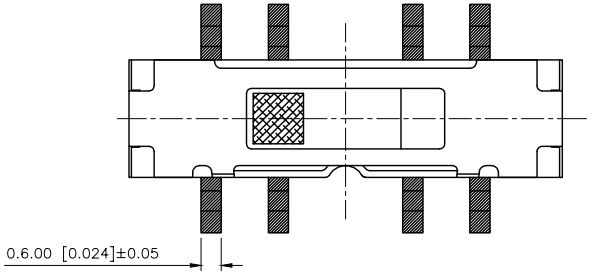

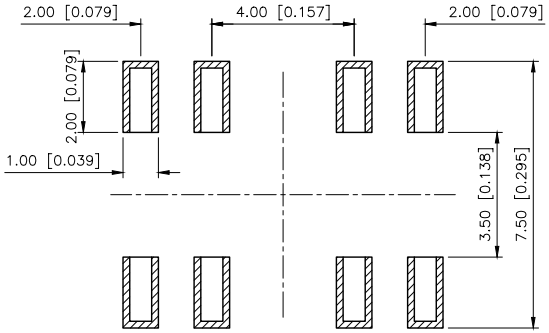

PCB LAYOUT

NOTE:
Rating: DC 12V 50mA
Operating Force:200±100gf
Lifetime:10,000 Cycles

PAPT NO	L
SS-3336S-02-L1	2.0
SS-3336S-02-L2	3.0
SS-3336S-02-L3	4.0

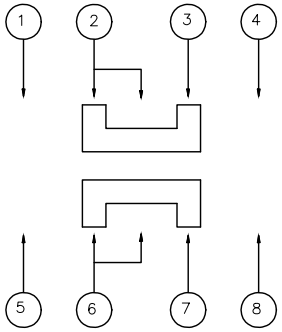

SCHEMATIC

ITEM	PAPT NAME	QTY	MATERIAL	FINISHING
5	Terminal	8	Brass (0.30t)	Ag Plated
4	Contact spring	1	Phosphor branze	Ag Plated
3	Base	1	PA46	Black
2	Cover	1	Sus	Natural
1	Keystake	1	PA46	Black

AuGLAR	±5°
X.	±0.40
X.x	±0.30
X.xx	±0.20
X.xxx	±0.15
UNSPECIFIED TOLERAuCES	

XKB Connection 星创

DESIGN	阿树	VIEW:	MODEL TYPE: SLIDE SWITCH
CHECKED		UNIT: mm/in	PART NO.: SS-3336S-02-L2
APPROVED		SIZE: A4	DWG NO.: X-SS-3336S-02-L2

XKB INDUSTRIAL PRECISION CO.,LIMITED

SCALE	PAGE	REVISION
N/A	1/1	A1