REVISIONS					
REV.	ECN NO.	LOCATION	DESCRIPTION	DATE	DESIGN
A1	N/A		A: 72~100pin	2025.07.24	
A2	ECN-P-2026031802	A2 X1	4.00: 72~100pin	2026.03.18	

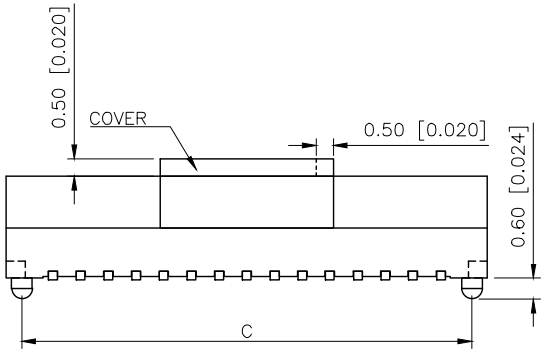

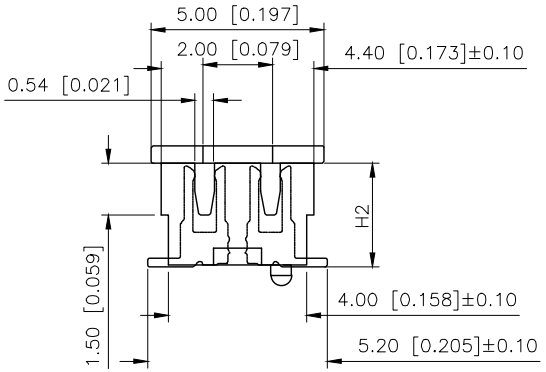

MATING HEIGHT	PLUG(H1)	SOCKET(H2)
4.0	1.0	3.0
4.5	1.0	3.5
5.0	2.0/1.0	3.0/4.0
5.5	2.0/1.0	3.5/4.5
6.0	2.0	4.0
6.5	2.0	4.5
7.0	4.0	3.0
7.5	4.0	3.5
8.0	4.0	4.0
8.5	4.0	4.5

PART NO.:

X0812 F V S-12 C S-9T V01

Series No
Category:F-Female
Welding Board Angle:V-Stright 180°
Welding Way: S-SMT
Row No-Pin No:XX-04P-100P
Mating Height:A=3.0mm;B=3.5mm;C=4.0mm;D=4.5mm;
Special No:S-With positioning Column
Material:9T-PA9T UL94V-0 Black
Plating:V01-Gold Flash

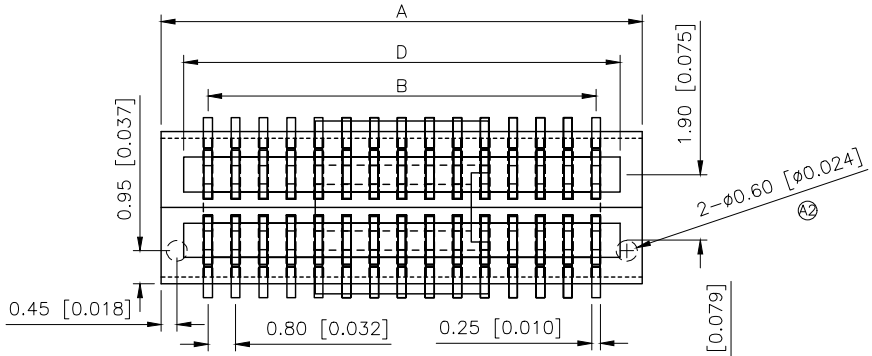

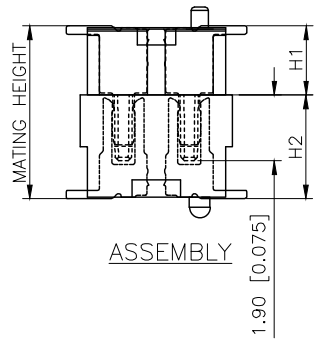

ASSEMBLY

No.of contacts	Dimensions				No.of contacts	Dimensions			
	A±0.10	B±0.10	C±0.10	D±0.10		A±0.10	B±0.10	C±0.10	D±0.10
8	5.10	2.40	4.20	3.60	56	24.30	21.60	23.40	22.80
10	5.90	3.20	5.00	4.40	58	25.10	22.40	24.20	23.60
12	6.70	4.00	5.80	5.20	60	25.90	23.20	25.00	24.40
14	7.50	4.80	6.60	6.00	62	26.70	24.00	25.80	25.20
16	8.30	5.60	7.40	6.80	64	27.50	24.80	26.60	26.00
18	9.10	6.40	8.20	7.60	66	28.30	25.60	27.40	26.80
20	9.90	7.20	9.00	8.40	68	29.10	26.40	28.20	27.60
22	10.70	8.00	9.80	9.20	70	29.90	27.20	29.00	28.40
24	11.50	8.80	10.60	10.00	72	30.70	28.00	29.80	29.20
26	12.30	9.60	11.40	10.80	74	31.50	28.80	30.60	30.00
28	13.10	10.40	12.20	11.60	76	32.30	29.60	31.40	30.80
30	13.90	11.20	13.00	12.40	78	33.10	30.40	32.20	31.60
32	14.70	12.00	13.80	13.20	80	33.90	31.20	33.00	32.40
34	15.50	12.80	14.60	14.00	82	34.70	32.00	33.80	33.20
36	16.30	13.60	15.40	14.80	84	35.50	32.80	34.60	34.00
38	17.10	14.40	16.20	15.60	86	36.30	33.60	35.40	34.80
40	17.90	15.20	17.00	16.40	88	37.10	34.40	36.20	35.60
42	18.70	16.00	17.80	17.20	90	37.90	35.20	37.00	36.40
44	19.50	16.80	18.60	18.00	92	38.70	36.00	37.80	37.20
46	20.30	17.60	19.40	18.80	94	39.50	36.80	38.60	38.00
48	21.10	18.40	20.20	19.60	96	40.30	37.60	39.40	38.80
50	21.90	19.20	21.00	20.40	98	41.10	38.40	40.20	39.60
54	23.50	20.80	22.60	22.00	100	41.90	39.20	41.00	40.40

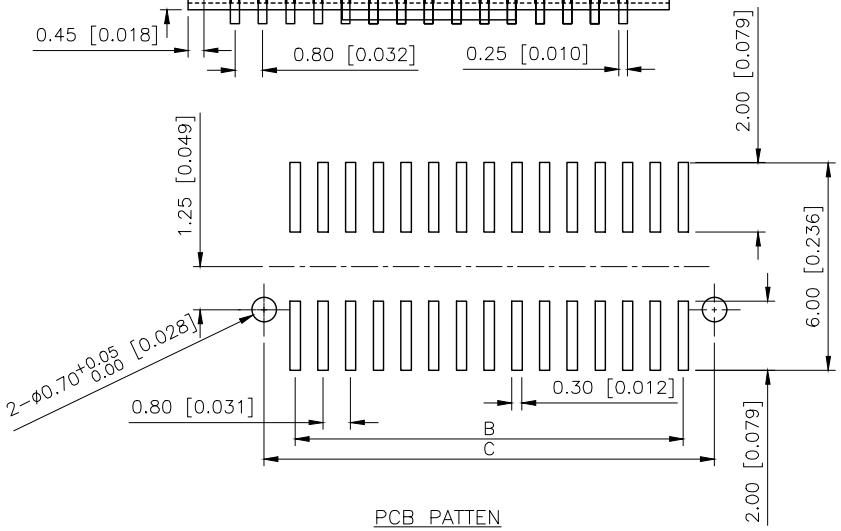

PCB PATTEN

Specifications( )
1.Voltage rating( ):DC 200V
2.Current rating( ):1A AC/DC
3.Withstanding voltage( ):≥500V AC/minute
4.Insulation resistance( ):≥100MΩ Min
5.Contact resistance( ):≤40mΩ Max
6.Temperature range( ):-30 ~+85

AuGLAR	±5°
X.	±0.40
X.x	±0.30
X.xx	±0.20
X.xxx	±0.15
UNSPECIFIED TOLERAuCES	

XKB Connection

DESIGN		VIEW:	MODEL TYPE: 0.8mm BTB Style Connectors
CHECKED		UNIT: mm/in	PART NO.: X0812FVS-12CS-9TV01
APPROVED		SIZE: A4	DWG NO.:

XKB INDUSTRIAL PRECISION CO.,LIMITED

SCALE	PAGE	REVISION
N/A	1/1	A2