REVISIONS					
REV.	ECN NO.	LOCATION	DESCRIPTION	DATE	DESIGN
A0	N/A		INITIAL RELEASE	/	/
A1	N/A		图面升级整理图面	2025.03.14	阿树

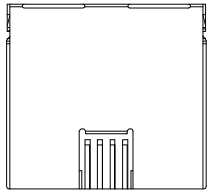

TOP VIEW

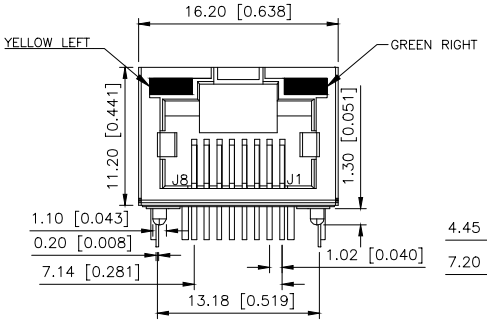

FRONT VIEW

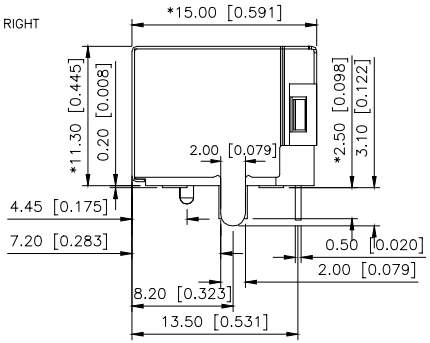

RIGHT SIDE VIEW

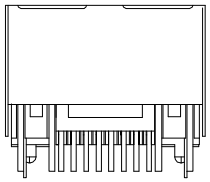

BACK VIEW

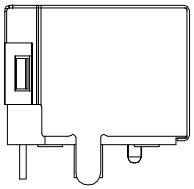

LEFT SIDE VIEW

MATERIAL 材料:
HOUSING 外壳: LCP,UL94V-0,BLACK.
TERMINAL 端子: PHOSPHOR BRONZE T=0.46MM, GOLD PLATING
SHIELD 保护物: C2680,T=0.20MM,20 MIN NICKEL PLATING ON ALL AREA.
MECHANICAL 机械:
DURABILITY 耐用性: 750 CYCLES MIN,12.5MM/MINUTE.
INSERTION FORCE 插入力:2.2KG.F MAX
RETENTION STRENGTH 保持力:7.7KG.F BETWEEN JACK AND PLUG.
OPERATING TEMPERATURE 工作温度: -40°C~+85°C.
STORAGE TEMPERATURE 储存温度: -40°C~+85°C.
ALL CRITICAL DIMENSIONS WITH "*"
ELECTRICAL电气:
VOLTAGE 电压: 125 VOLTS AC.
CURRENT RATING 电流额定值: 1.5AMP.
DIELECTRIC STRENGTH 介电强度: 1000 VAC RMS 50HZ OR 60HZ,1 MIN
INSULATION RESISTANCE 绝缘电阻: 500 MEGA OHMS MIN.INITIAL AFTER 500V DC FOR 1 MINUTE.
CONTACT RESISTANCE 接触电阻:SINGLE TERMINAL 30 MILLIOHMS MAX. INITIAL 50 MILLIOHMS MAX. AFTER DURABILITY TEST.

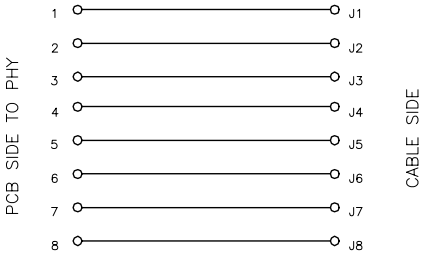

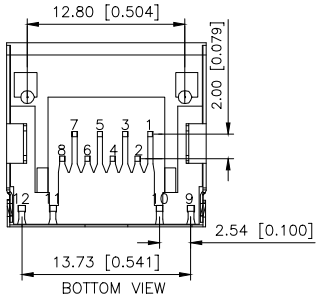

BOTTOM VIEW

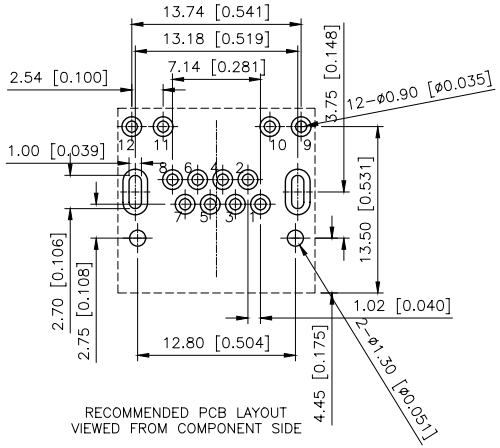

RECOMMENDED PCB LAYOUT
VIEWED FROM COMPONENT SIDE

X28ADAB1A6DY3008

1:Au=1U"
3:Au=3U"
4:Au=6U"
5:Au=15U"
6:Au=30U"

LED Specification

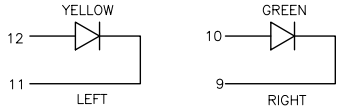

LED Specification

Standard LED Color	LED Wavelength	Foward(A)	Foward(V)
Green	568nm	20mA	1.8-2.8V
Yellow	585nm	20mA	1.8-2.8V

AuGLAR	±5°
X.	±0.40
X.x	±0.30
X.xx	±0.20
X.xxx	±0.15
UNSPECIFIED TOLERAuCES	

XKB 星创 Connection

DESIGN	阿树	VIEW:	MODEL TYPE: RJ JACK
CHECKED		UNIT: mm/in	PART NO.: X28ADAB1A6DY3008
APPROVED		SIZE: A4	DWG NO.: X-X28ADAB1A6DY3008

XKB INDUSTRIAL PRECISION CO.,LIMITED

SCALE	PAGE	REVISION
N/A	1/1	A1

www.helloxkb.com www.helloxkb.cn www.xk-dg.cn