REVISIONS					
REV.	ECN NO.	LOCATION	DESCRIPTION	DATE	DESIGN
A0	N/A		INITIAL RELEASE	/	/
A1	N/A		图面升级整理图面	2025.05.26	阿树

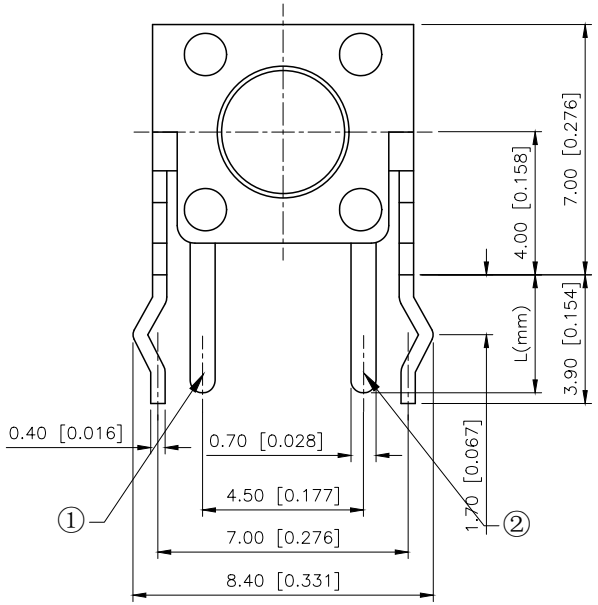

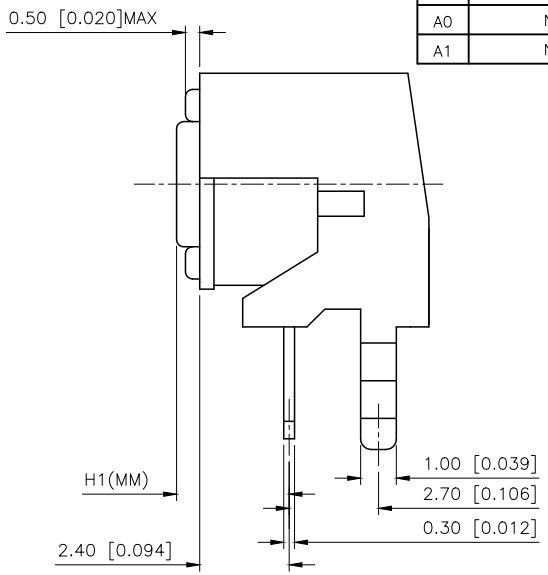

Code-x	H1(mm)	H2(mm)	øA	L
A1	3.15	4.30	3.50	3.70
AS	3.35	4.50		
A	3.85	5.00		
AL	4.35	5.50	3.40	
Q	4.85	6.00		
QL	5.35	6.50		
B	5.85	7.00		
E	6.15	7.30		
EL	6.35	7.50		
C	6.85	8.00		
CL	7.35	8.50		
DS	7.85	9.00		
D	8.35	9.50		
DL	8.85	10.00	3.00	

Code-x	H1(mm)	H2(mm)	øA	L
KS	9.35	10.50	3.00	3.70
K	9.85	11.00		
KL	10.35	11.50		
FS	10.85	12.00		
F	11.35	12.50		
FL	11.85	13.00		
G	12.35	13.50		
O	12.85	14.00		
X	13.35	14.50		
Y	13.35	15.00		
Z	14.85	16.00		
J	15.15	16.30		
I	15.85	17.00		

SPECIFICATION
Contact Rating: 50mA,12V DC
Contact Resistance: 100mΩ max
Insulation Resistance: 100MΩ min.500V DC
Dielectric Strength: 250V AC/1minute
Travel: 0.25mm
Operating Temp: −30℃~+85℃
Storage Temp: −30℃~+80℃

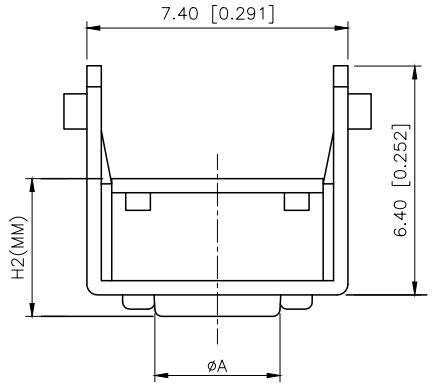

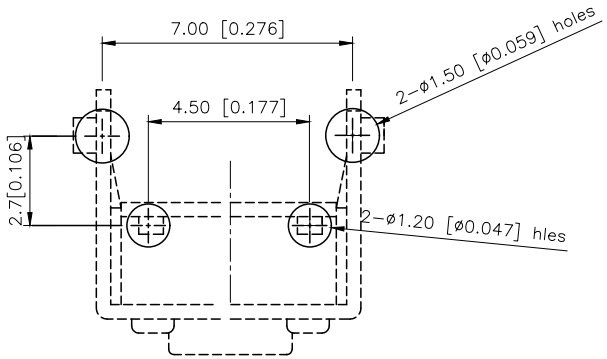

P.C.B MOUNTING PATTERN DIMENSION
The following soldering patterns are recommended for reflow soldering

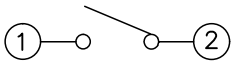

CIRCUIT DIAGRAM

PAPT NO	TC-1102N-C-KL-B
Operating Force	A:100gf B:160gf C:260gf
Height	H
Colour	B:Black BR:Brown R:Red O:Orange G:Green Y:Yellow BL:Blue W:White

ITEM	PAPT NAMF	QTY	MATERIAL	FINISHING
⑤	Terminal	2	Brass（0.30t）	Plating silvering
④	Contact	1	F.ag/SUS	Natural
③	Base	1	PPA	
②	Cover	1	Spcc	Plating Nickel
①	Keystake	1	PPA	

AuGLAR	±5°
X.	±0.40
X.x	±0.30
X.xx	±0.20
X.xxx	±0.15
UNSPECIFIED TOLERAuCES	

XKB Connection 星科

DESIGN	阿树	VIEW:	MODEL TYPE: TACT SWITCH
CHECKED		UNIT: mm/in	PART NO.: TC-1102N-C-KL-B
APPROVED		SIZE: A4	DWG NO.: X-TC-1102N-C-KL-B

XKB INDUSTRIAL PRECISION CO.,LIMITED

SCALE	PAGE	REVISION
N/A	1/1	A1