REVISIONS					
REV.	ECN NO.	LOCATION	DESCRIPTION	DATE	DESIGN
A0	N/A		INITIAL RELEASE	/	/
A1	N/A		图面升级整理图面	2025.06.24	阿树

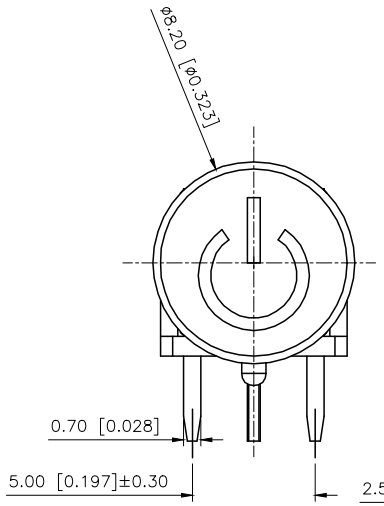

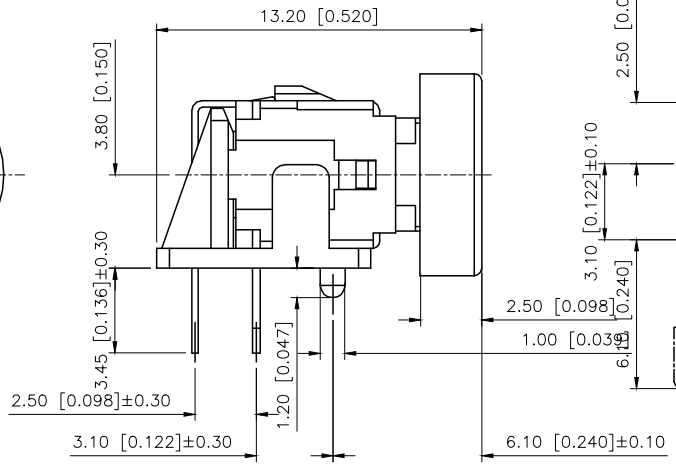

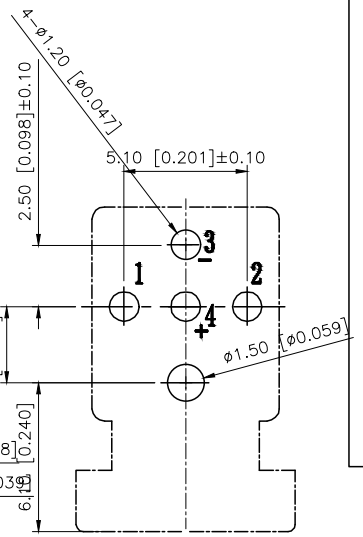

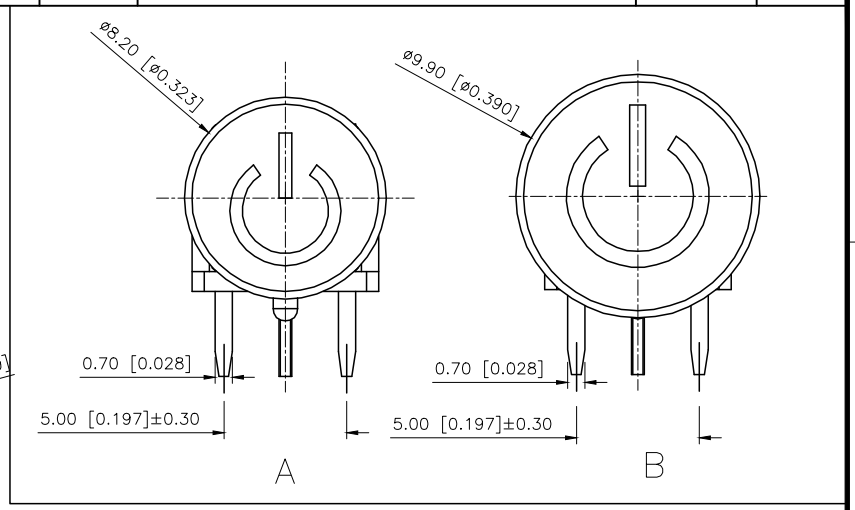

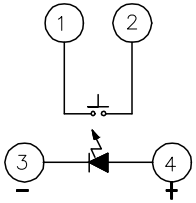

Led Color	Part No
White	TM-007-D1-B-01
Red	TM-007-D1-B-02
Blue	TM-007-D1-B-03
Green	TM-007-D1-B-04
Yellow	TM-007-D1-B-05

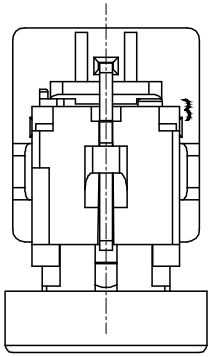

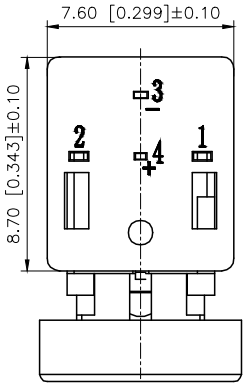

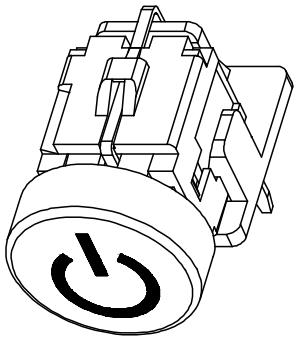

ITEM	PAPT NAMF	QTY	MATERIAL	FINISHING
7	LED	1		
6	Hat	1	ABS	Ag Plated
5	Terminal	4	Brass (0.30t)	
4	Contact	1	F.ag/SUS	
3	Base	1	PA66	
2	Cover	1	PA66	
1	Keystake	1	POM	

AuGLAR	±5°
X.	±0.40
X.x	±0.30
X.xx	±0.20
X.xxx	±0.15
UNSPECIFIED TOLERAuCES	

XKB Connection 星创

DESIGN	阿树	VIEW:	MODEL TYPE: LED SWITCH
CHECKED		UNIT: mm/in	PART NO.: TM-007-D1-B-01
APPROVED		SIZE: A4	DWG NO.:

XKB INDUSTRIAL PRECISION CO.,LIMITED

SCALE	PAGE	REVISION
N/A	1/1	A1