REVISIONS					
REV.	ECN NO.	LOCATION	DESCRIPTION	DATE	DESIGN
A0	N/A		INITIAL RELEASE	/	/
A1	N/A		图面升级整理图面	2025.2.14	阿树

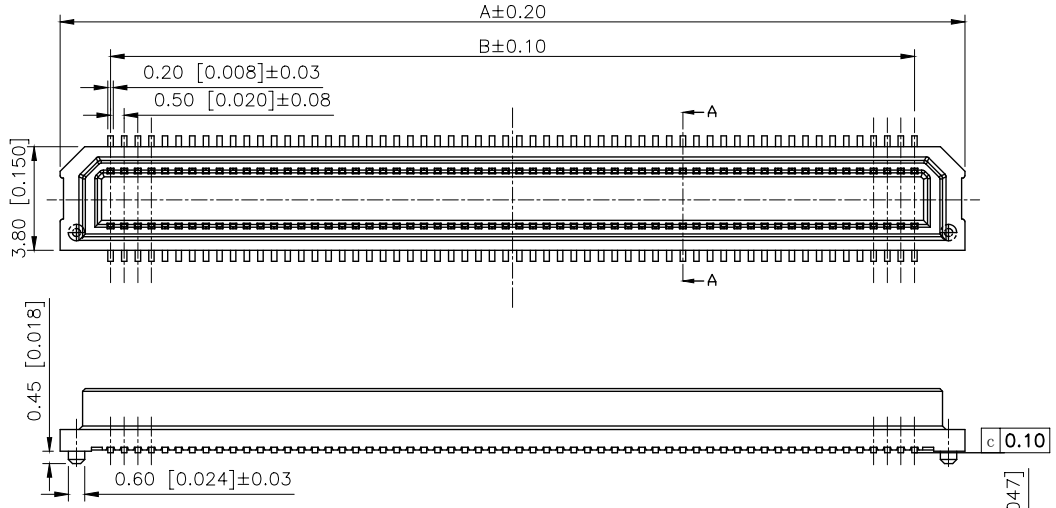

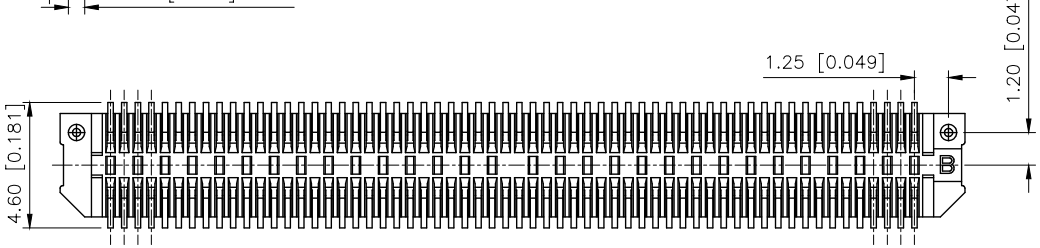

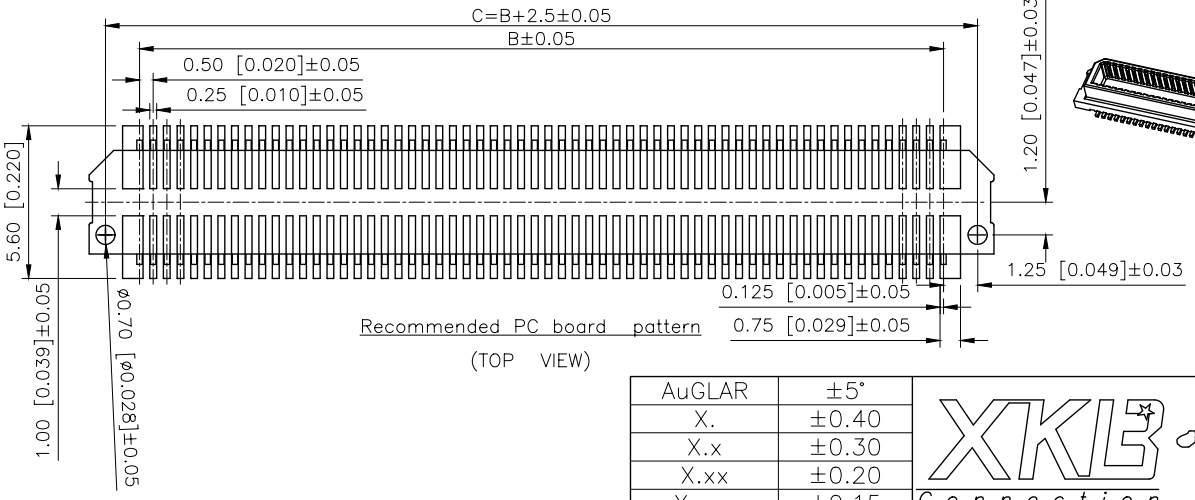

Recommended PC board pattern

(TOP VIEW)

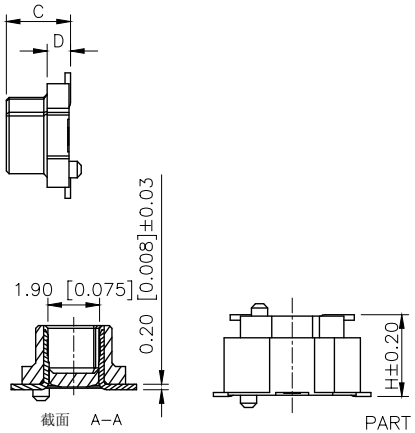

Specifications:
规格:
Voltage rating:60V AC/DC
额定电压：60V AC/DC
Current rating:0.5A AC/DC
额定电流：0.5A AC/DC
Withstanding voltage:1500V AC/minute
耐受电压：1500V AC/分钟
Temperature range:-55℃-+105℃
温度范围：-55℃-+105℃
Insulation resistance:500MΩ min
绝缘电阻：500MΩ Min
Contact resistance:80mΩ Max
接触电阻：80mΩ Max

PART NO.:

X0528 W V S-100 A S-LP V01
① ② ③ ④ ⑤ ⑥ ⑦ ⑧ ⑨

①Series No
②Category:W-Wafer
③Welding Board Angle:V-Stright 180°
④Welding Way: S-SMT
⑤Row No.Pin No:XX-20-120P
⑥Total Height:A=2.40mm;B=2.90mm;C=3.40mm
⑦Special No:S-With positioning Columm
⑧Material:LP-LCP UL 94V-0
⑨Plating:V01-Gold Flash

Total Height (H)	Male Height(C)	D
3.0mm	2.40	0.85
3.5mm	2.90	1.35
4.0mm	3.40	1.85

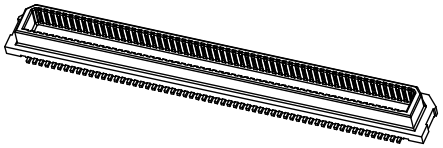

Poles	A	B
20	8.20	4.50
22	8.70	5.00
30	10.70	7.00
34	11.70	8.00
40	13.20	9.50
50	15.70	12.00
60	18.20	14.50
70	20.30	17.00
80	23.20	19.50
100	28.20	24.50
120	33.20	29.50

PART NO	Material	Material(Pin)	Suitable XKB Wafer
X0582WVS-100AS-LPV01	LCP	Phosphor copper	X0582WVS

AuGLAR	±5°
X.	±0.40
X.x	±0.30
X.xx	±0.20
X.xxx	±0.15
UNSPECIFIED TOLERAuCES	

XKB Connection 星坤

DESIGN	阿树	VIEW:	MODEL TYPE: 0.5mm BTB Style Connector
CHECKED		UNIT: mm/in	PART NO.: X0582WVS-100AS-LPV01
APPROVED		SIZE: A4	DWG NO.:

XKB INDUSTRIAL PRECISION CO.,LIMITED

SCALE	PAGE	REVISION
N/A	1/1	A1

www.helloxkb.com www.helloxkb.cn www.xk-dg.cn