REVISIONS					
REV.	ECN NO.	LOCATION	DESCRIPTION	DATE	DESIGN
A0	N/A		INITIAL RELEASE	/	/
A1	N/A		图面升级整理图面	2025.04.21	阿树

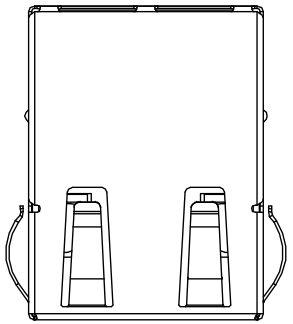

TOP VIEW

Electrical 电气:
1.Turn ratio 匝数比:1~2:J1~J2=1CT:1CT(±2%).
3~4:J3~J6=1CT:1CT(±2%)
7~8:J4~J5=1CT:1CT(±2%)
9~10:J7~J8=1CT:1CT(±2%)
2.OCL 已占搭载量:180uH Min.at 100KHz 100mV
3.Insertion Loss 插入损耗:−1.0 dB Max 1~125MHz.
4.Return loss 回波损耗:−20dB Min 1~40MHz.
−20+15LOG10(f/40MHz) Min 40~200MHz.
5.Cross talk 声道串扰: −30dB Min 1~125MHz
6.CMR 共模抑制:−30dB Min 30~200MHz;
7.Hi−Pot 耐压测试:2250V DC 6S 1mA PRI TO SEC

MATERIAL 材料:
HOUSING 外壳: PBT,UL94V−0,BLACK.
TERMINALS BRACKET 端子支架: PBT,UL94V−0,BLACK.
SHIELD 保护物: C2680,T=0.20MM,NICKEL PLATING ON ALL AREA.
TERMINAL 端子: PHOSPHOR BRONZE C5210,T=0.35MM,
GOLD PLATING ON CONTACT AREA.
MECHANICAL 机械:
DURABILITY 耐用性: 750 CYCLES MIN.
MATING FORCE 配合力: 23N MAX.
OPERATING TEMPERATURE 工作温度: −40°C~+85°C.
STORAGE TEMPERATURE 储存温度: −40°C~+85°C.
ALL CRITICAL DIMENSIONS WITH "*"

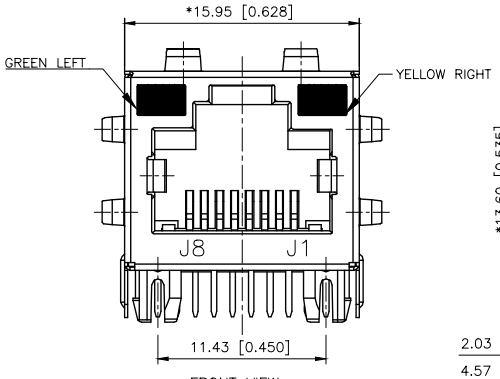

FRONT VIEW

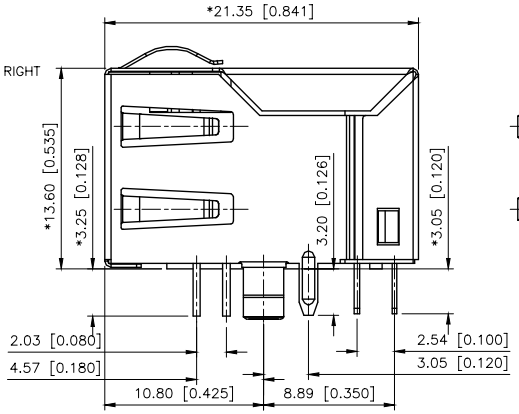

RIGHT SIDE VIEW

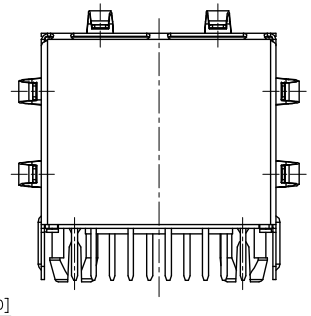

BACK VIEW

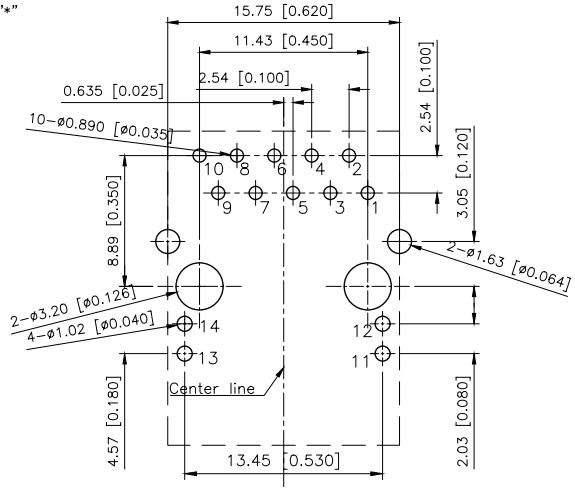

RECOMMENDED PCB LAYOUT
VIEWED FROM COMPONENT SIDE

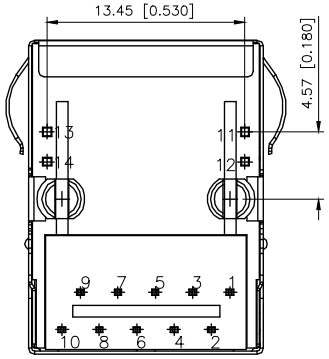

BOTTOM VIEW

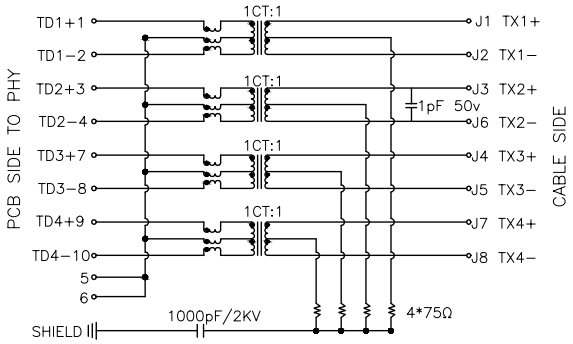

X02AQ285FD2DD42

1:Au=1U"
3:Au=3U"
4:Au=6U"
5:Au=15U"
6:Au=30U"

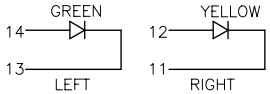

LED Specification

Standard LED Color	LED Wavelength	Foward(A)	Foward(V)
Green	568mm	20mA	1.85−2.45V
Yellow	585mm	20mA	1.7−2.2V

AuGLAR	±5°
X.	±0.40
X.x	±0.30
X.xx	±0.20
X.xxx	±0.15
UNSPECIFIED TOLERAuCES	

XKB Connection 星创

DESIGN	阿树	VIEW:	MODEL TYPE: RJ JACK
CHECKED		UNIT: mm/in	PART NO.: X02AQ285FD2DD42
APPROVED		SIZE: A4	DWG NO.: X−X02AQ285FD2DD42

XKB INDUSTRIAL PRECISION CO.,LIMITED

SCALE	PAGE	REVISION
N/A	1/1	A1

www.helloxkb.com www.helloxkb.cn www.xk−dg.cn