REVISIONS					
REV.	ECN NO.	LOCATION	DESCRIPTION	DATE	DESIGN
A0	N/A		INITIAL RELEASE	/	/
A1	N/A	A1 X1	产品尺寸变更，图面升级整理图面	2025.03.11	阿树

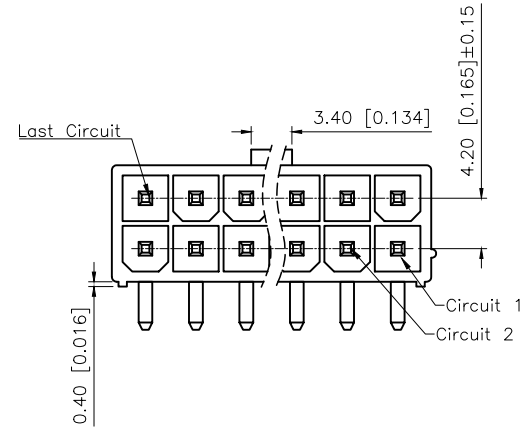

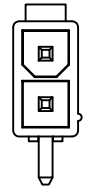

2x01P

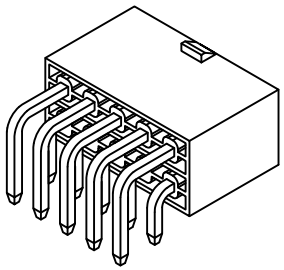

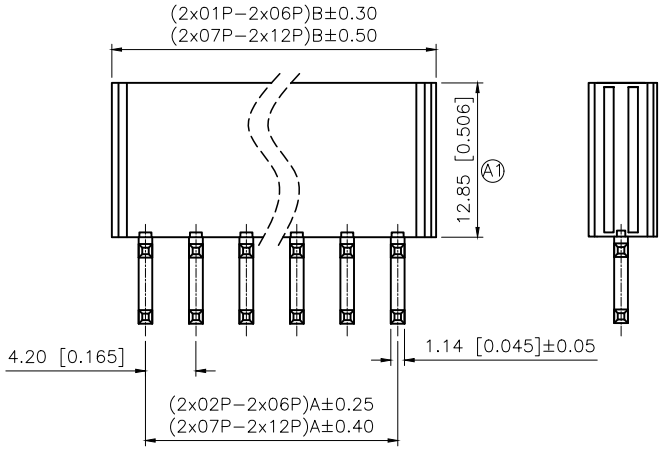

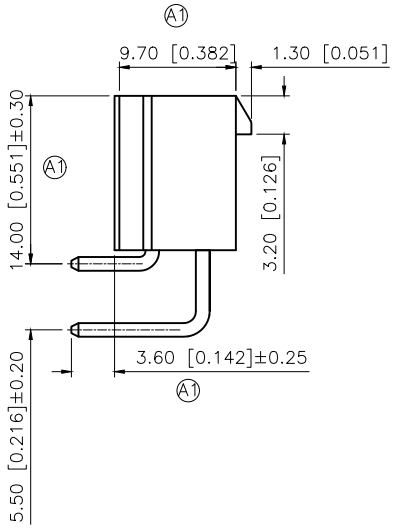

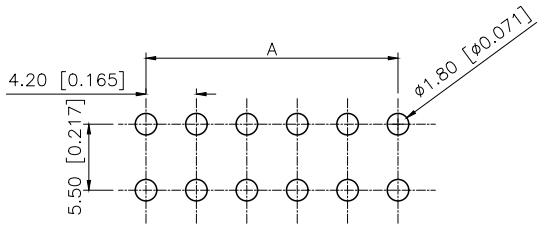

P.C.B LAYOUT

■SPECIFICATIONS
- Voltage rating:600V AC/DC
- Current rating:9A AC/DC
- Withstanding Voltage:1500V AC/minute
- Temperature range:-45°C+125°C
- Insulation resistance:≥1000MΩ
- Contact resistance:≤10mΩ
- After environmental testing:≤20mΩ

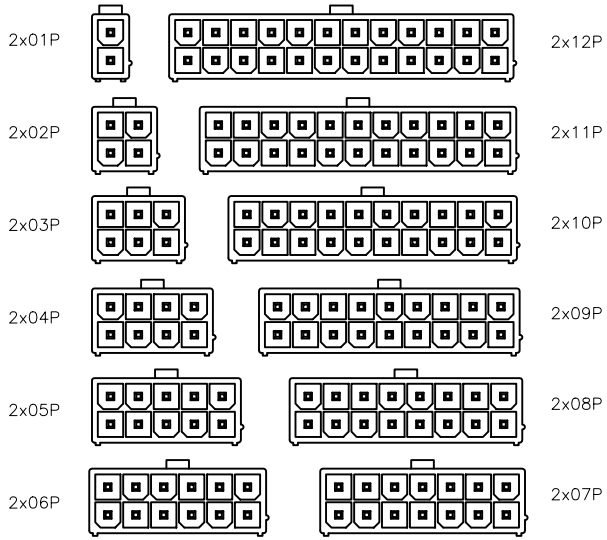

PART NO.:

X9357 W R-2x06-N2 SN BK
① ② ③ ④ ⑤ ⑥ ⑦

①Series No
②Category:W-Wafer
③Welding Board Angle:R-Stright 90°
④Row No.Pin No:2xXX-2x01~2x12Pin
⑤Material:N0-PA66 94V-0; N2-PA66 94V-7
LP-LCP94V-0;
⑥Planting Category:V:All Gold-Plated*01-Gold Flash;
SN-Bright tin plating 70u"
⑦Color:Blank-Natural Color
BK-Black;

Poles	Dimensions(mm)	
	A	B
2x01	---	5.60
2x02	4.20	9.80
2x03	8.40	14.00
2x04	12.60	18.20
2x05	16.80	22.40
2x06	21.00	26.60
2x07	25.20	30.80
2x08	29.40	35.00
2x09	33.60	39.20
2x10	37.80	43.40
2x11	42.00	47.60
2x12	46.20	51.80

PART NO	Material	Material(Pin)	Finish(Pin)	Suitable XKB	Q'ty/Bag
X9357WR-2xXX-N0V01	Nylon 66 UL 94V-0; White	Brass	Gold-Flash	X9357H	1,000Pcs
X9357WR-2xXX-N0SN	Nylon 66 UL 94V-0		Tin-Plated		
X9357WR-2xXX-N2V01	Nylon 66 UL 94V-2; White semi transparent		Gold-Flash		
X9357WR-2xXX-N2SN	Nylon 66 UL 94V-2		Tin-Plated		

AuGLAR	±5°
X.	±0.40
X.x	±0.30
X.xx	±0.20
X.xxx	±0.15
UNSPECIFIED TOLERAuCES	

XKB Connection 星创

DESIGN	阿树	VIEW:	MODEL TYPE: 4.20 mm Crimp Style Connectors
CHECKED		UNIT: mm/in	PART NO.: X9357WR-2x06-N2SNBK
APPROVED		SIZE: A4	DWG NO.:

XKB INDUSTRIAL PRECISION CO.,LIMITED

SCALE	PAGE	REVISION
N/A	1/1	A1