REVISIONS					
REV.	ECN NO.	LOCATION	DESCRIPTION	DATE	DESIGN
A0	N/A		INITIAL RELEASE	/	/
A1	N/A		图面升级整理图面	2024.12.5	阿树

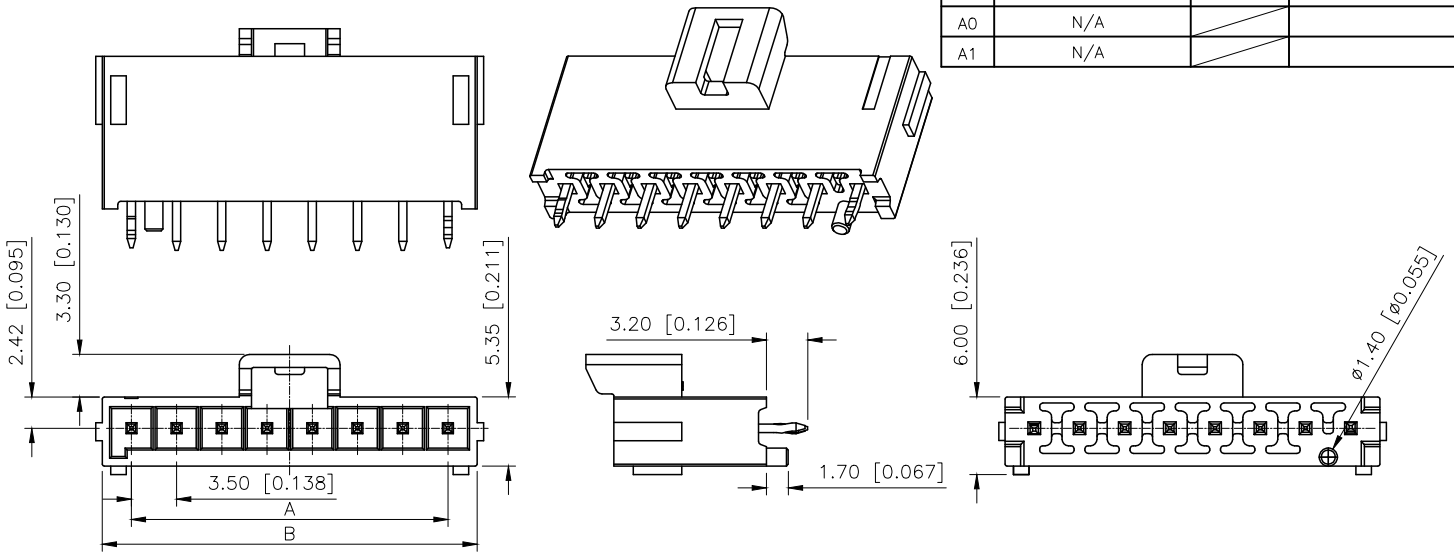

Specifications:
规格：
Voltage rating:400V AC/DC
额定电压：400V AC/DC
Current rating:14A AC/DC
额定电流：14A AC/DC
Withstanding voltage:1800V AC/minute
耐受电压：1800V AC/分钟
Temperature range:−40℃−+125℃
温度范围：−40℃−+125℃
Insulation resistance:1000MΩ min
绝缘电阻：1000MΩ Min
Contact resistance:15mΩ Max
接触电阻：15mΩ Max

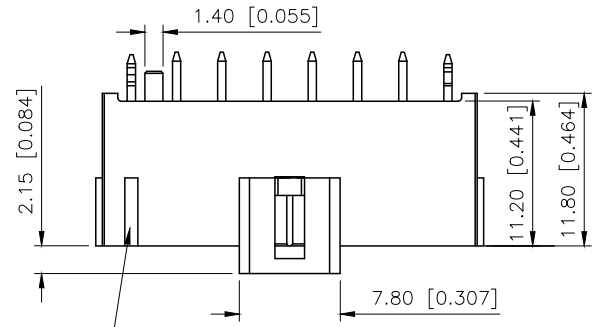

First Circuit mark
(not showing on 4 and 6
Circuits series)

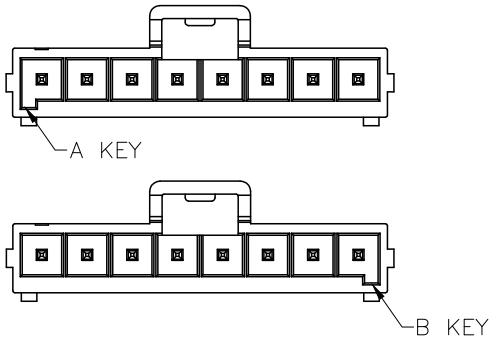

PART NO.:

X3501 W V−03 A S−LP SN
① ② ③ ④ ⑤ ⑥ ⑦ ⑧

①Series No
②Category:W−Wafer
③Welding Board Angle:V−Stright 180°
④Row No.Pin No:XX−02~12P
⑤Category:
A:With post.A Key Black
B:With post.B Key Nature
⑥Type: S−With positioning column
⑦Material:LP−LCP UL94V−0
⑧Plating:SN−Tin Plated
V01:Gold Flash

Poles	Dimensions	
	A	B
02	3.50	8.00
03	7.00	11.50
04	10.50	15.00
05	14.00	18.50
06	17.50	22.00
07	21.00	25.50
08	24.50	29.00
12	38.50	43.00

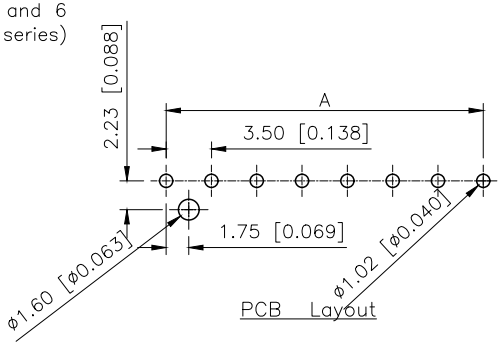

PCB Layout

X3501WV−03AS−LPSN	LCP	Copper Alloy	WV−XXAS	X3501H−A/ X3501H−A0
			WV−XXBS	X3501H−B/ X3501H−B0
PART NO	Material	Material(Pin)	Category	Suitable XKB Housing

AuGLAR	±5°
X.	±0.40
X.x	±0.30
X.xx	±0.20
X.xxx	±0.15
UNSPECIFIED TOLERAuCES	

XKB Connection 星创

DESIGN	阿树	VIEW:	MODEL TYPE: 3.5mm Crimp Style Connector
CHECKED		UNIT: mm/in	PART NO.: X3501WV−03AS−LPSN
APPROVED		SIZE: A4	DWG NO.: X−X3501WV−03AS−LPSN

XKB INDUSTRIAL PRECISION CO.,LIMITED

SCALE	PAGE	REVISION
N/A	1/1	A1