REVISIONS					
REV.	ECN NO.	LOCATION	DESCRIPTION	DATE	DESIGN
A0	N/A		INITIAL RELEASE	2026.01.28	
A1	N/A			2026.03.09	

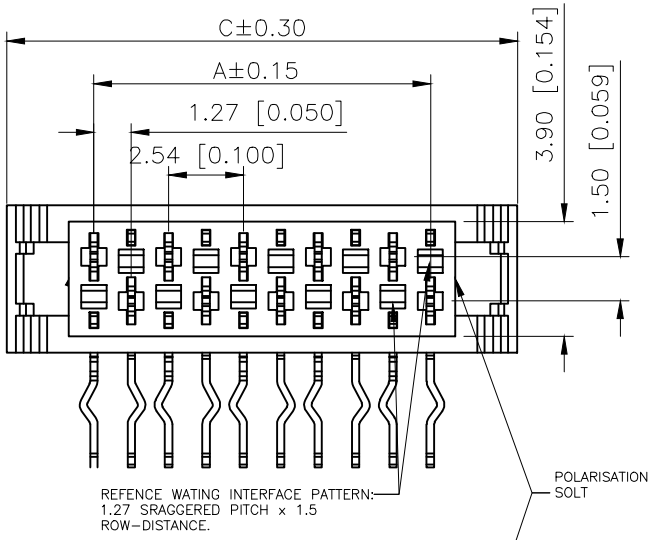

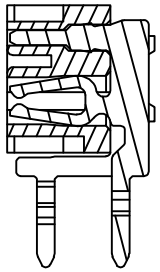

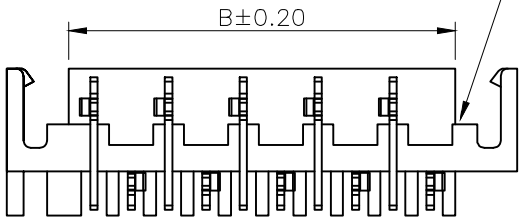

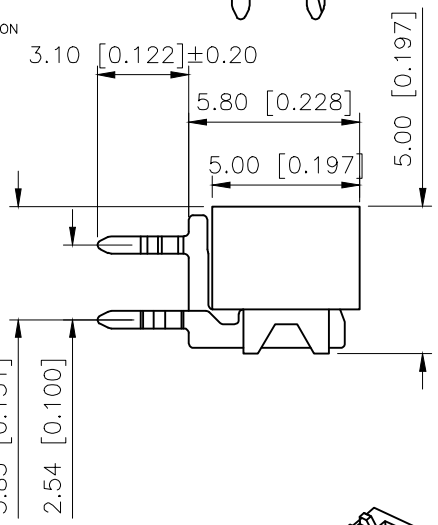

■SPECIFICATIONS
- •Voltage rating:500V AC/DC
- •Current rating:1A AC/DC
- •Withstanding Voltage:1000V AC/minute
- •Temperature range:−40°C~+125°C
- •Insulation resistance:≥1000MΩ
- •Contact resistance ≤20mΩ
- •After environment testing ≤30mΩ

PART NO.:

X9127 F R−18 B1−9T SN RE

Series No
Category:F−Female
Welding Board Angle:R−Stright 90°
Row No.Pin No:XX−04~26Pin
Plug the Pin & Special No.:
B1−Have ears, have platform, both missing
Material: 9T−PA9T UL 94V−0
Plating Category: SN−Bright tin Plating
Color: RE−Red RD−purplish red

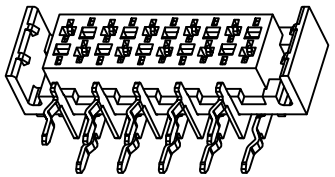

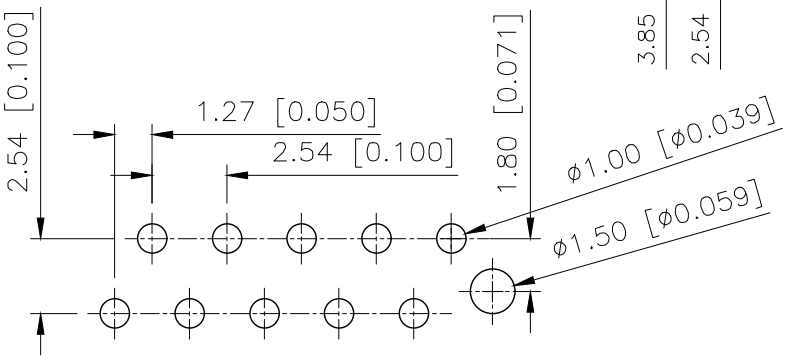

PCB LAYOUT

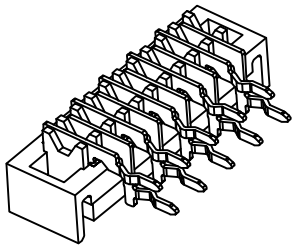

Poles	DIM.A	DIM.B	DIM.C	Poles	DIM.A	DIM.B	DIM.C
4	3.81	5.50	9.71	16	19.05	20.74	24.95
6	6.35	8.04	12.25	18	21.59	23.28	27.49
8	8.89	10.58	14.79	20	24.13	25.82	30.03
10	11.43	13.12	17.33	22	26.67	28.36	32.57
12	13.97	15.66	19.87	24	29.21	30.90	35.11
14	16.51	18.20	22.41	26	31.75	33.44	37.65

PART NO	Color	Material	Material(Pin)	Finish(Pin)	Suitable XKB Wafer
X9127FR−18B1−9TSNRD	Purplish	PBT UL 94V−0	Brass	Tin−Plated	X9127W
X9127FR−18B1−9TSNRE	RED				

AuGLAR	±5°
X.	±0.40
X.x	±0.30
X.xx	±0.20
X.xxx	±0.15
UNSPECIFIED TOLERAuCES	

XKB Connection

DESIGN		VIEW:	MODEL TYPE: 1.27mm Crimp Style Connectors( )
CHECKED		UNIT: mm/in	PART NO.: X9127FR−18B1−9TSNRE
APPROVED		SIZE: A4	DWG NO.:

XKB INDUSTRIAL PRECISION CO.,LIMITED

SCALE	PAGE	REVISION
N/A	1/1	A1