REVISIONS					
REV.	ECN NO.	LOCATION	DESCRIPTION	DATE	DESIGN
A0	N/A		INITIAL RELEASE	/	/
A1	N/A		图面升级整理图面	2025.05.26	阿树

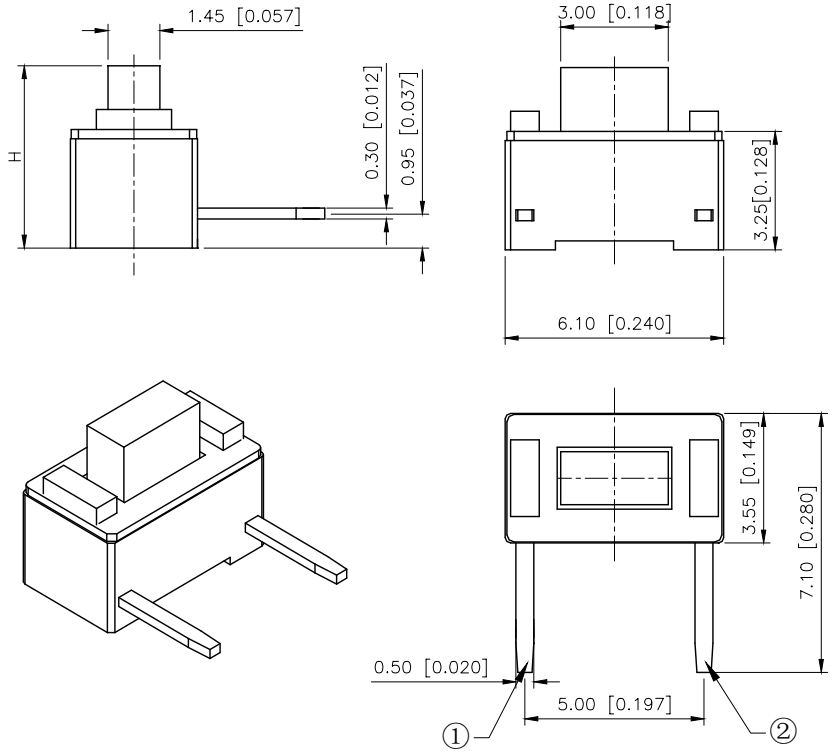

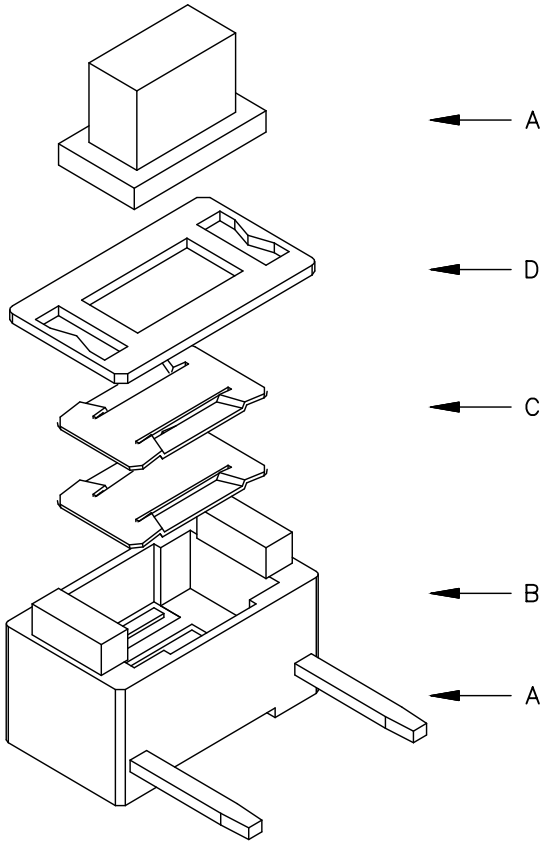

主要技术参数、性能
The Main Thchnology Performance
额定电流、电压:50mA DC12V
Rate voltage.current:50mA DC12V
接触电阻:≤100mΩ
Contact resistance:≤100mΩ
按力:50gf
Operating force:50gf
行程:0.20± 0.10mm
Travel:0.20± 0.10mm
绝缘电阻:≥100MΩ
Insulated resistance:≥100MΩ
介电强度:≥250VAC/1min
Di electric strength:≥250VAC/1min

PAPT NO	TC-1101DE-B-C
Operating Force	B:160gf C:260gf
Height	code-x

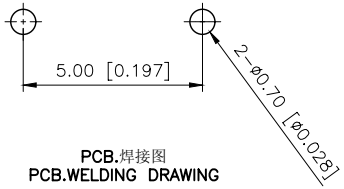

PCB.焊接图
PCB.WELDING DRAWING

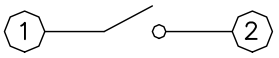

电路图
CIRCUIT DIAGRAM

code-x	H
A	4.3
B	4.8
C	5.0
D	5.3
E	5.5
F	6.0

ITEM	PAPT NAME	QTY	MATERIAL	FINISHING
⑤	Terminal	2	Brass (0.30t)	Plating silvering
④	Contact	1	F.ag/SUS	Natural
③	Base	1	PPA	
②	Cover	1	Spcc	Plating Nickel
①	Keystake	1	PPA	

AuGLAR	±5°
X.	±0.40
X.x	±0.30
X.xx	±0.20
X.xxx	±0.15
UNSPECIFIED TOLERAuCES	

XKB Connection 星坤

DESIGN	阿树	VIEW:	MODEL TYPE: TACT SWITCH
CHECKED		UNIT: mm/in	PART NO.: TC-1101DE-B-C
APPROVED		SIZE: A4	DWG NO.: TC-1101DE-B-C

XKB INDUSTRIAL PRECISION CO.,LIMITED

SCALE	PAGE	REVISION
N/A	1/1	A1

www.helloxkb.com www.helloxkb.cn www.xk-dg.cn