REVISIONS					
REV.	ECN NO.	LOCATION	DESCRIPTION	DATE	DESIGN
A1	N/A		图面升级整理图面	2025.06.16	阿树
A2	N/A		/	2025.09.18	阿树

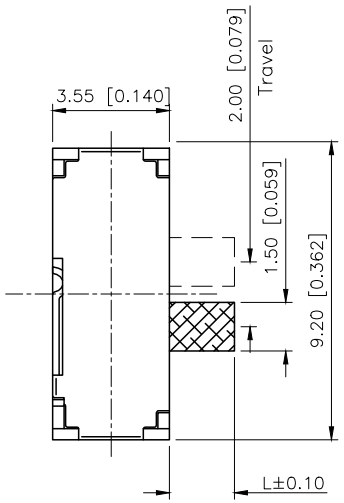

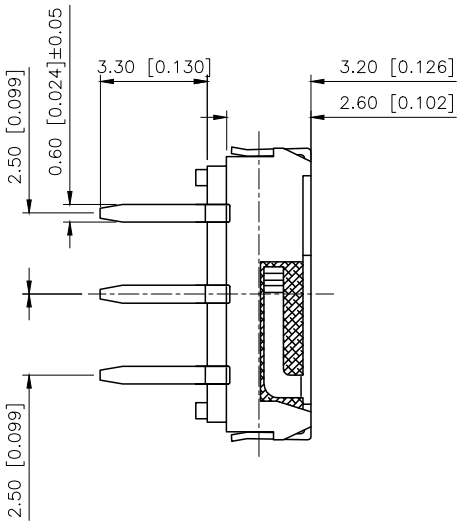

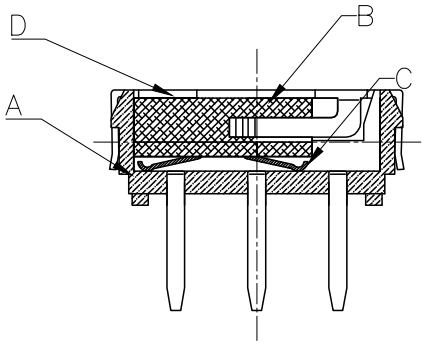

Specifications(规格):
1.Voltage rating(额定电压):DC 120V
2.Current rating(额定电流):100mA AC/DC
3.Withstanding voltage(耐压值):≥100V AC/minute
4.Insulation resistance(绝缘电阻):≥100MΩ Min
5.Contact resistance(接触电阻):≤100mΩ Max
6.Mating cycles（使用寿命）：10,000 cycles Min
7.Operating force（操作力）：200±50gf/150±50gf
8.Temperature range(使用温度):−10℃~+60℃

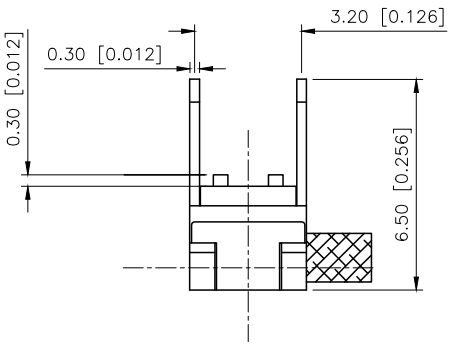

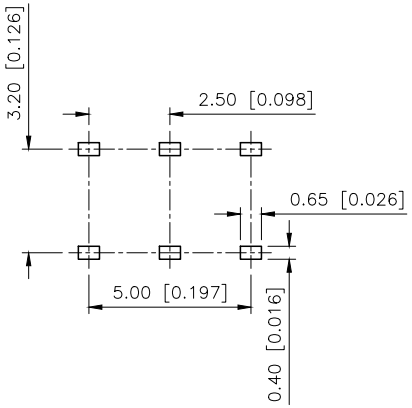

PCB LAYOUT

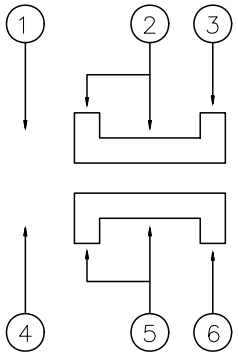

SCHEMATIC

PAPT NO	L
SK−3245D−02−L1	2.00
SK−3245D−02−L2	2.50
SK−3245D−02−L3	3.00
SK−3245D−02−L4	4.00

ITEM	PAPT NAME	QTY	MATERIAL	FINISHING/COLOR
D	Contact spring	2	Beryllium bronze	Silver white/Ag Plated
C	Base	1	POM	Black/Ag Plated
B	Cover	1	Sus	Silver white
A	Keystake	1	PA46	Black

AuGLAR	±5°
X.	±0.40
X.x	±0.30
X.xx	±0.20
X.xxx	±0.15
UNSPECIFIED TOLERAuCES	

XKB Connection 星创

DESIGN	阿树	VIEW:	MODEL TYPE: SLIDE SWITCH
CHECKED		UNIT: mm/in	PART NO.: SK−3245D−02−L3
APPROVED		SIZE: A4	DWG NO.: X−SK−3245D−02−L3

XKB INDUSTRIAL PRECISION CO.,LIMITED

SCALE	PAGE	REVISION
N/A	1/1	A2