REVISIONS					
REV.	ECN NO.	LOCATION	DESCRIPTION	DATE	DESIGN
A0	N/A		INITIAL RELEASE	2024.05.09	桑 甚

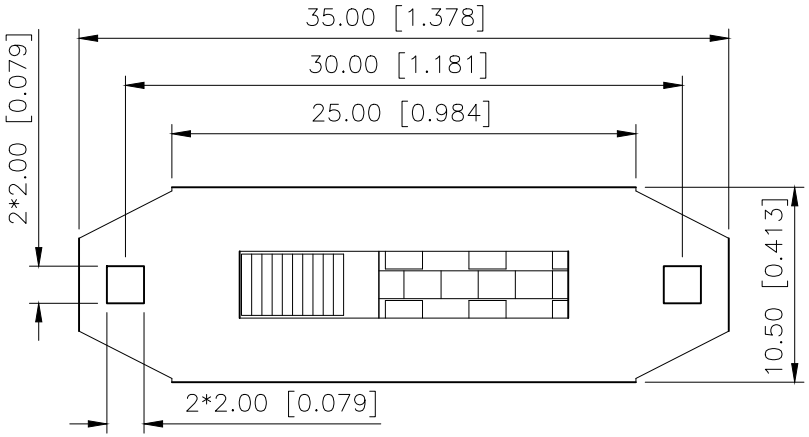

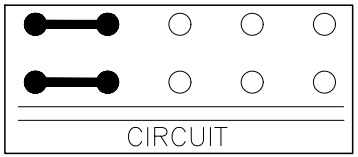

规格 Specification：

1.额定值 Rating:3A 125/250VAC
2.接触电阻 Contact resistance:≤30 mΩ
3.绝缘电阻 Insulation resistance:≥100 MΩ(DC500V/Min)
4.电气寿命 Electronics life:＞10000 cycles
5.操作力 Operation force:500±150gf
6.所有材料符合Rohs要求 All meterials are Rohs compliant

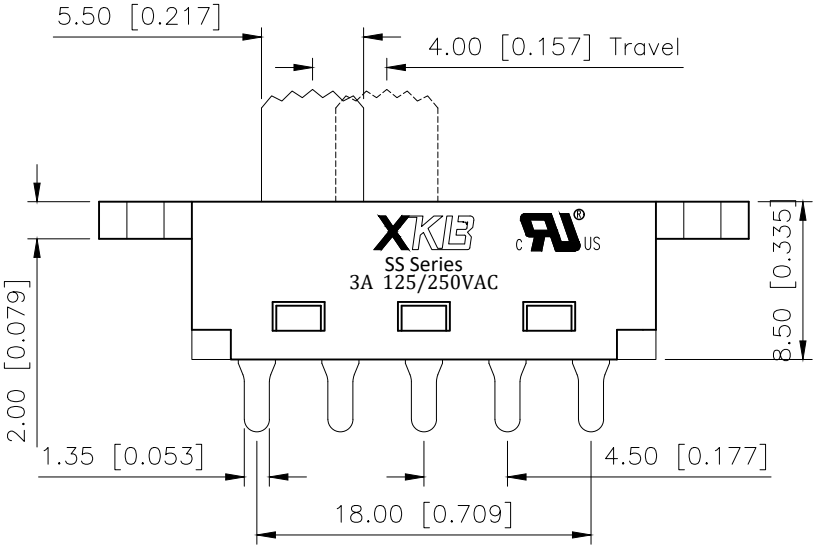

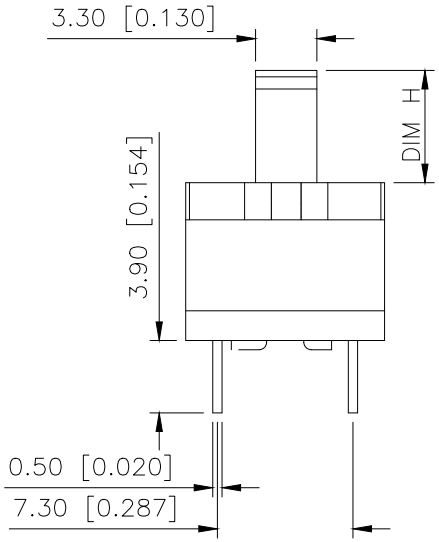

PART NO.:

SS–X 03 24 P G–5 R 1 B B
① ② ③ ④ ⑤ ⑥ ⑦ ⑧ ⑨ ⑩ ⑪

① SS：XKB Vertical handle;
② Enclosure Material：
A–Metal case;
BLANK–Plastic case;
③ Current Rating：03–3A;
④ Switch Circuit:24–2P4T;
⑤ P：Welding plates;
⑥ Handle Shape：G–Camber handle;
⑦ Handle Height：3~15mm;
⑧ Enclosure Shape:R–Locking rings enclosure;
⑨ Terminal specs:
1:TYPE–1；2:TYPE–2；3:TYPE–3；
4:TYPE–4；5:TYPE–5；
⑩ Handle Colour:
B–Black；W–White；R–Red
⑪ Housing Colour:
B–Black；W–White；R–Red

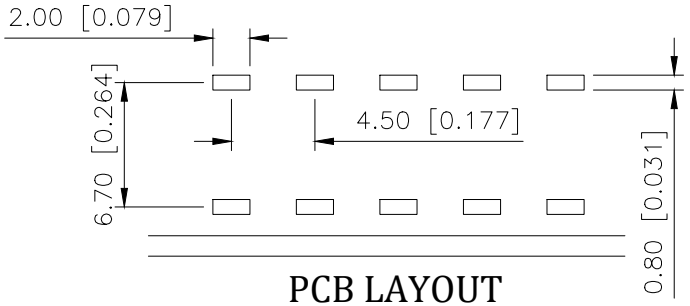

PCB LAYOUT

XKB SS Series 3A 125/250VAC

产品字码标识

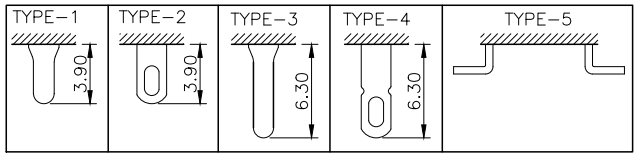

ANGLAR	±5°
X.	±0.40
X.x	±0.30
X.xx	±0.20
X.xxx	±0.15
UNSPECIFIED TOLERANCES	

DESIGN	桑 甚	VIEW:	MODEL TYPE: SLIDE SWITCH
CHECKED		UNIT: mm/in	PART NO.: SS–0324PG–5R1BB
APPROVED		SIZE: A4	DWG NO.: X–SS–0324PG–5R1BB

XKB INDUSTRIAL PRECISION CO.,LIMITED

SCALE	PAGE	REVISION
N/A	1/1	A0