REVISIONS					
REV.	ECN NO.	LOCATION	DESCRIPTION	DATE	DESIGN
A0	N/A		INITIAL RELEASE	/	/
A1	N/A		图面升级整理图面	2025.10.13	阿树

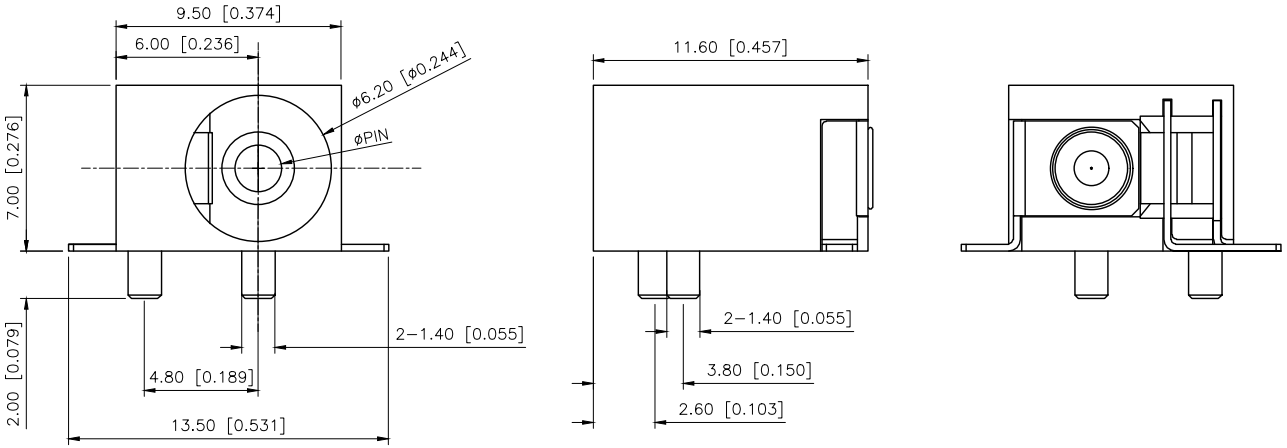

Specifications(规格):
1.Voltage rating(额定电压):DC 30V
2.Current rating(额定电流):3A AC/DC
3.Withstanding voltage(耐压值):≥250V AC/minute
4.Insulation resistance(绝缘电阻):≥100MΩ Min
5.Contact resistance(接触电阻):≤20mΩ Max
6.Mating cycles（使用寿命）: 5000 cycles Min
7.Insertion and extraction force（插拔力）: 3~15N
8.Temperature range(使用温度):-30℃~+70℃

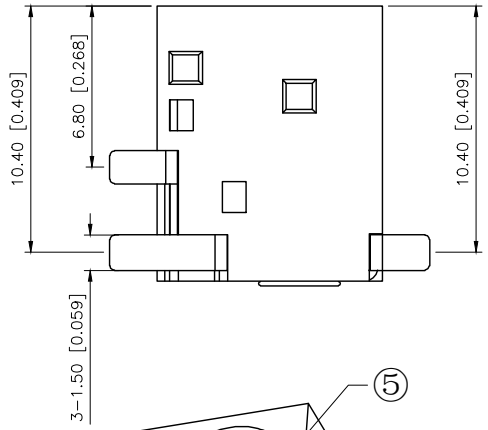

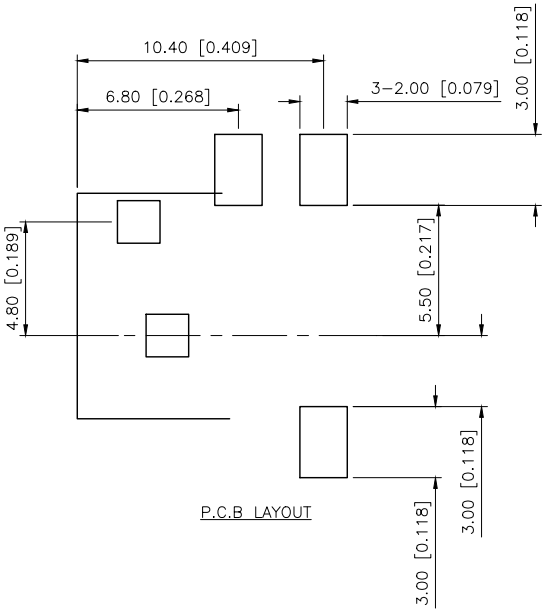

P.C.B LAYOUT

SCHEMATIC	4 3 2
Model	DC-044D-2.5A
Center Pin	Ø2.0 mm
	Ø2.5 mm

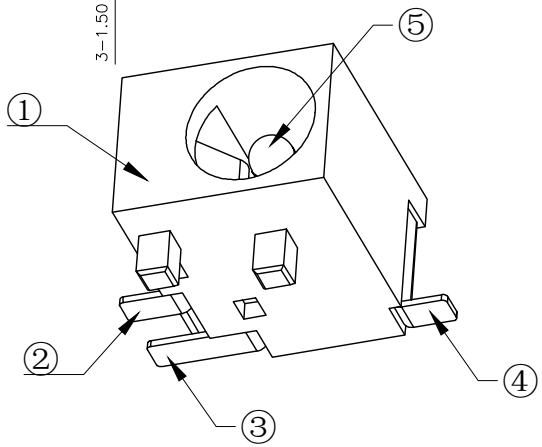

NO	PAPT NAMF	QTY	MATERIAL	PLATING/COLOR
5	PIN	1	H59 Brass(Y)	D.Cu/Sn
4	Terminal 3	1	H62 Brass ø=0.3mm	D.Cu/Sn
3	Terminal 2	1	H62 Brass ø=0.3mm	D.Cu/Sn
2	Terminal 1	1	Phosphor Bronze ø=0.33mm	D.Sn/Sb
1	Pedestal	1	PA9T	Black

AuGLAR	±5°
X.	±0.40
X.x	±0.30
X.xx	±0.20
X.xxx	±0.15
UNSPECIFIED TOLERAuCES	

XKB 星坤 Connection

DESIGN	阿树	VIEW:	MODEL TYPE: DC POWER JACK
CHECKED		UNIT: mm/in	PART NO.: DC-044D-2.5A-2.5-SMT
APPROVED		SIZE: A4	DWG NO.: X-DC-044D-2.5A-2.5-SMT

XKB INDUSTRIAL PRECISION CO.,LIMITED

SCALE	PAGE	REVISION
N/A	1/1	A1

www.helloxkb.com www.helloxkb.cn www.xk-dg.cn