REVISIONS					
REV.	ECN NO.	LOCATION	DESCRIPTION	DATE	DESIGN
A0	N/A		INITIAL RELEASE		
A1	N/A		图面升级整理图面	2024.08.28	阿树

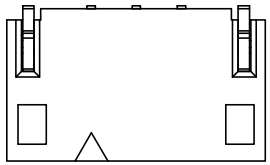

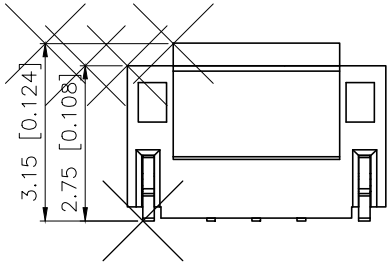

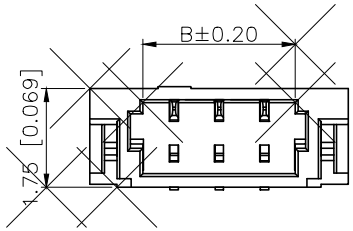

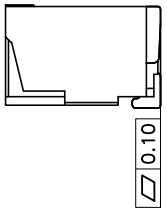

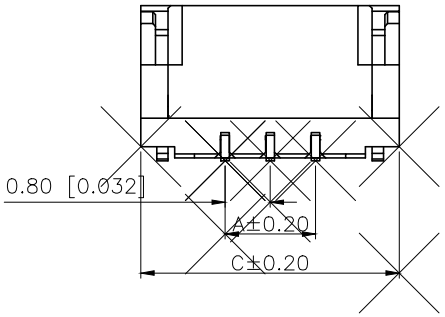

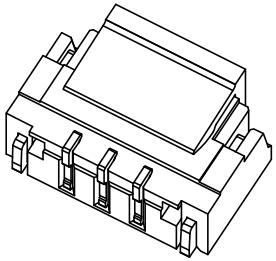

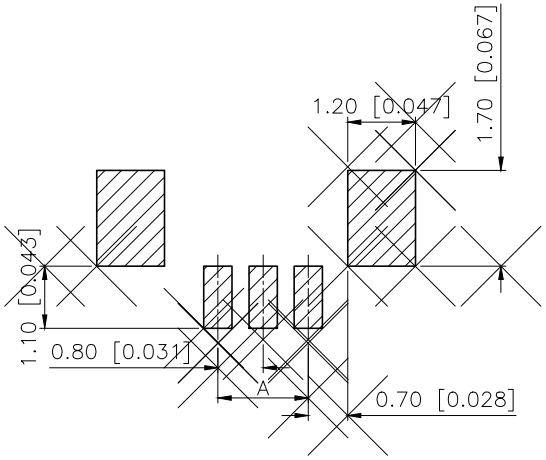

P.C.B Layout

Specifications:
规格:
Voltage rating:30V AC/DC
额定电压：30V AC/DC
Current rating：0.5A AC/DC
额定电流：0.5A AC/DC
Withstanding voltage:200V AC/minute
耐压电压：200V AC/分钟
Temperature range:−40℃～+125℃
温度范围：−40℃～+125℃
Insulation resistance:≥100MΩ
绝缘电阻：≥100MΩ
Contact resistance：≤20mΩ
接触电阻:≤20mΩ
After environment testing：≤40mΩ
环境试验后：≤40mΩ

PART NO.:

X0800 W V S − 04 HF− LP SN
① ② ③ ④ ⑤ ⑥ ⑦ ⑧

①Series No.
②Category: W−wafer
③Welding Board Angle: V−180°
④Welding Way:S−SMT
⑤Row No.−Pin No.XX−Single row
⑥Plug the Pin & Special NO.:HF−Halogen free
⑦Material: LP−LCP 94V−0
⑧Planting Category : SN−Bringht tin plating

Poles	Dimensions(mm)			Poles	Dimensions(mm)		
	A	B	C		A	B	C
02	0.80	1.90	3.78	12	8.80	9.90	11.78
03	1.60	2.70	4.58	13	9.60	10.70	12.58
04	2.40	3.50	5.38	14	10.40	11.50	13.38
05	3.20	4.30	6.18	15	11.20	12.30	14.18
06	4.00	5.10	6.98	16	12.00	13.10	14.98
07	4.80	5.90	7.78	17	12.80	13.90	15.78
08	5.60	6.70	8.58	18	13.60	14.70	16.58
09	6.40	7.50	9.38	19	14.40	15.50	17.38
10	7.20	8.30	10.18	20	15.20	16.30	18.18
11	8.00	9.10	10.98				

X0800WVS−04HF−LPSN	LCP UL 94V−0 Halogen−free	Phosphor Bronze	Tin−Plated	Brass	Tin−Plated	X0800H
PART NO	Material	Material(Pin)	Finish(pin)	Material (Solder Tabs)	Finish (Solder Tabs)	Suitable XKB Housing

ANGLAR	±5°
X.	±0.40
X.x	±0.30
X.xx	±0.20
X.xxx	±0.15
UNSPECIFIED TOLERANCES	

XKB 星创 Connection

DESIGN	阿树	VIEW:	MODEL TYPE: 0.80mm IDC Style Connectors
CHECKED		UNIT: mm/in	PART NO.: X0800WVS−04HF−LPSN
APPROVED		SIZE: A4	DWG NO.: X−X0800WVS−04HF−LPSN

XKB INDUSTRIAL PRECISION CO.,LIMITED

SCALE	PAGE	REVISION
N/A	1/1	A1