REVISIONS					
REV.	ECN NO.	LOCATION	DESCRIPTION	DATE	DESIGN
A0	N/A		INITIAL RELEASE	/	/
A1	N/A		料号变更，图面升级整理图面	2025.06.11	阿树

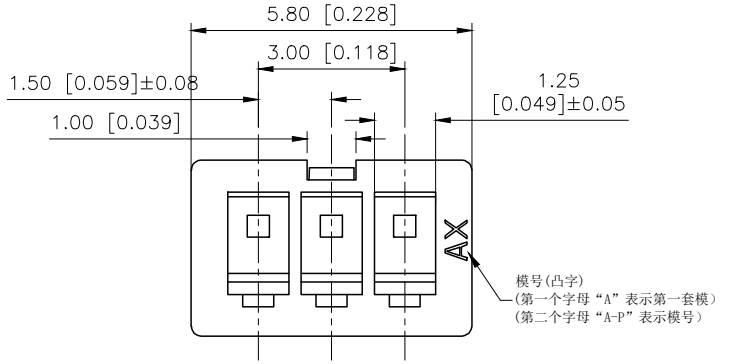

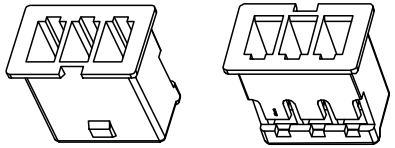

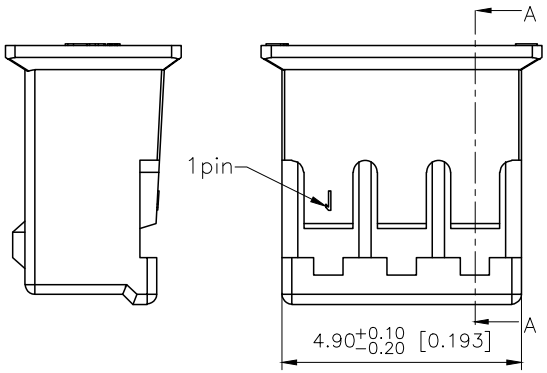

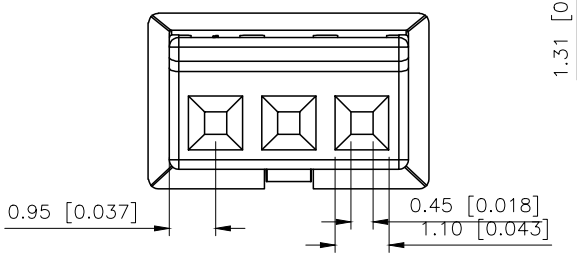

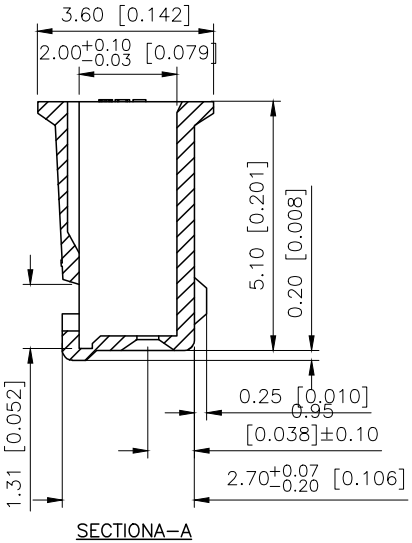

Specifications(规格)：
1.Voltage rating(额定电压):DC 30V
2.Current rating(额定电流):0.5A AC/DC
3.Withstanding voltage(耐压值):≥500V AC/minute
4.Insulation resistance(绝缘电阻):≥100MΩ Min
5.Contact resistance(接触电阻):≤20mΩ Max
6.Temperature range(使用温度):−40℃～+105℃

PART NO.:

X1525 H M−03−N2 XX
① ② ③ ④ ⑤ ⑥

①Series No
②Category:H−HSG
③Category:M−Male Housing
④Row No.Pin No:XX−03Pin
⑤Material:N2−PA66 UL94V−2
⑥Color:O−Orange

X1525HM−03−N2XX	PA66 UL 94V−2	X1525TF
PART NO	Material	Suitable XKB Terminal

AuGLAR	±5°
X.	±0.40
X.x	±0.30
X.xx	±0.20
X.xxx	±0.15
UNSPECIFIED TOLERAuCES	

XKB 星创 Connection

DESIGN	阿树	VIEW:	MODEL TYPE: 1.50mm Crimp Style Connector
CHECKED		UNIT: mm/in	PART NO.: X1525HM−03−N2XX
APPROVED		SIZE: A4	DWG NO.: X−X1525HM−03−N2XX

XKB INDUSTRIAL PRECISION CO.,LIMITED

SCALE	PAGE	REVISION
N/A	1/1	A1