REVISIONS					
REV.	ECN NO.	LOCATION	DESCRIPTION	DATE	DESIGN
A0	N/A		INITIAL RELEASE	/	/
A1	N/A	A1 X10	产品尺寸变更，图面升级整理图面	2025.04.19	阿树

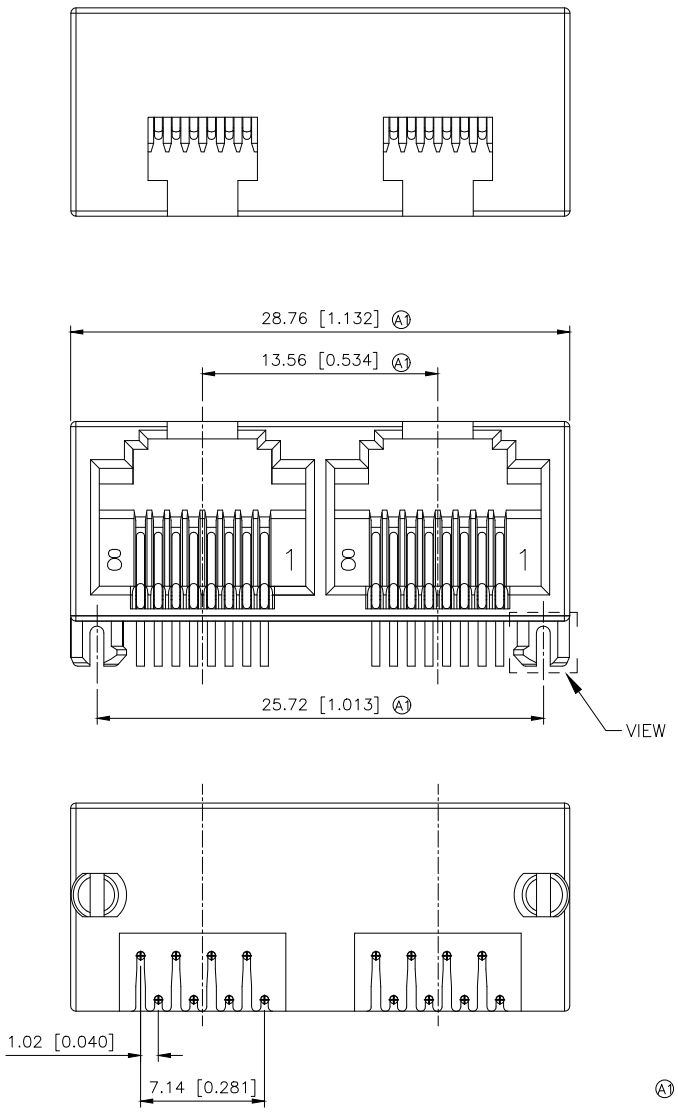

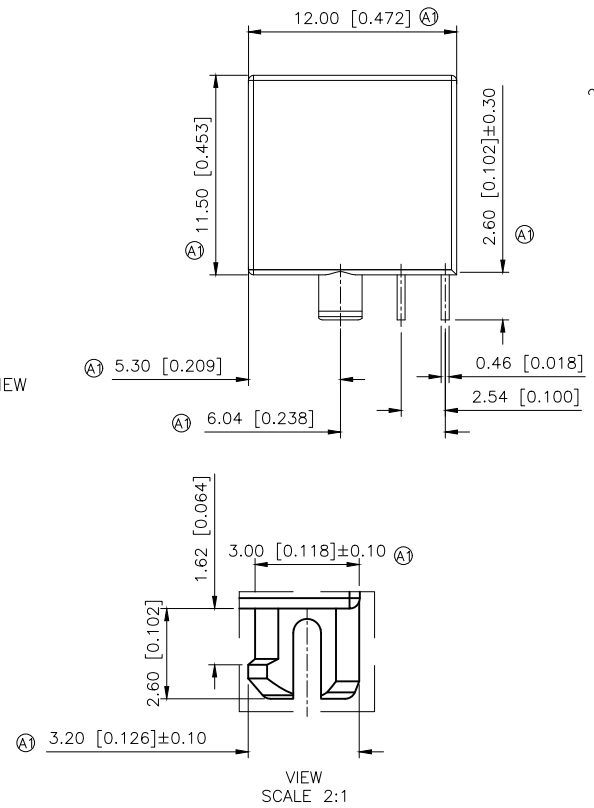

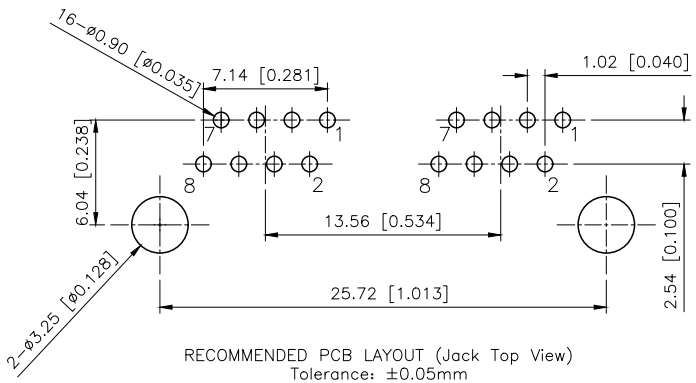

RECOMMENDED PCB LAYOUT (Jack Top View)
Tolerance: ±0.05mm
PCB Thickness:1.60mm

SPECIFICATION
1. VOLTAGE RATING: 150 VAC
2. CURRENT RATING: 1.5 AMP RMS..
3. CONTACT RESISTANCE: 40 mΩ MAX
4. INSULATION RESISTANCE: 500MΩ MIN.
5. WITHSTAND VOLTAGE: AC1000V RMS 60s.
6.OPERATING TEMPERATURE: −40°C~+80°C

NO	PART NAME	Q'TY	MATERIAL	PLATING & COLOR
2	Terminal	16	Phosphor Bronze ø0.46mm	G/F
1	Housing	1	PBT UL94V-0	See Table 1

AuGLAR	±5°
X.	±0.40
X.x	±0.30
X.xx	±0.20
X.xxx	±0.15
UNSPECIFIED TOLERAuCES	

XKB Connection 星创

DESIGN	阿树	VIEW:	MODEL TYPE: RJ JACK
CHECKED		UNIT: mm/in	PART NO.: X15BDIWA1DY1006
APPROVED		SIZE: A4	DWG NO.: X-X15BDIWA1DY1006

XKB INDUSTRIAL PRECISION CO.,LIMITED

SCALE	PAGE	REVISION
N/A	1/1	A1