| REVISIONS | | | | | |
|---|---|---|---|---|---|
| REV. | ECN NO. | LOCATION | DESCRIPTION | DATE | DESIGN |
| A0 | N/A | | INITIAL RELEASE | / | / |
| A1 | N/A | | 图面升级整理图面 | 2024.9.12 | 阿树 |

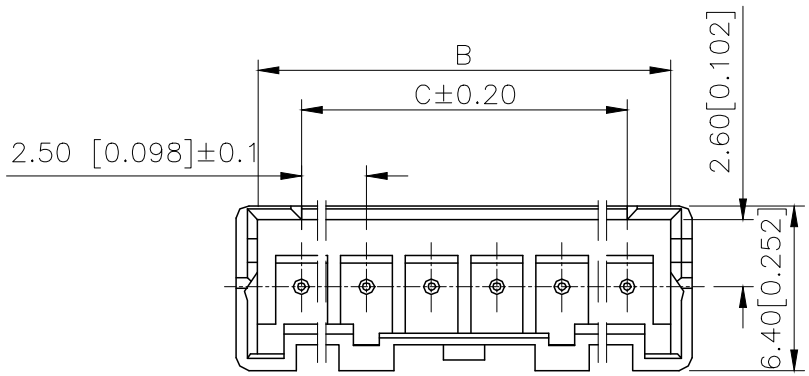


4PIN以上

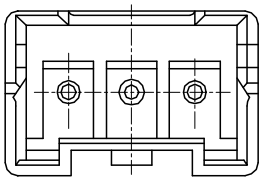

2PIN和3PIN

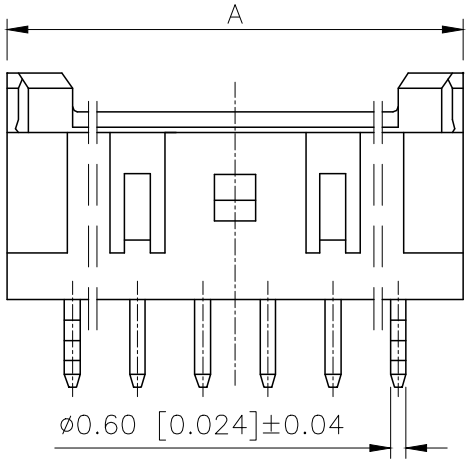


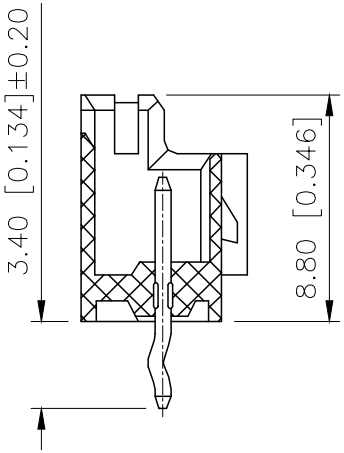


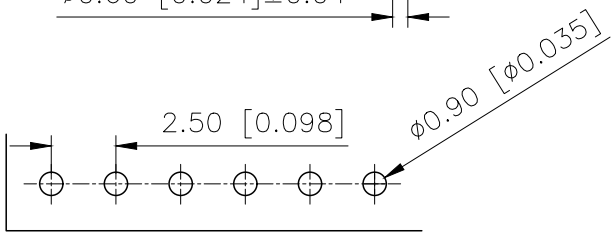


Recommand PCB Layout

■SPECIFICATIONS
- Voltage rating:250V AC/DC
- Current rating:3A AC/DC
- Withstanding Voltage:1500V AC/minute
- Temperature range:−40°C~+125°C
- Insulation resistance:≥500MΩ
- Contact resistance:≤10mΩ
- After environmental testing:≤20mΩ

PART NO.:

X2508 W V−04−N0 SN XX
① ② ③ ④ ⑤ ⑥ ⑦

①Series No
②Category:W−Wafer
③Welding Board Angle:V−Stright 180°
④Row No.Pin No:XX−02~15Pin
⑤Material:N0−PA66 94V−0;N2−PA66 94V−2
⑥Planting:SN−Bright Tin Plating
SN1−Bright Tin Plating
SW−Matte Tin Plating
⑦Color:Blank−natural color;

| POLES | A | B | C | POLES | A | B | C |
|---|---|---|---|---|---|---|---|
| 2 | 7.50 | 5.80 | 2.50 | 9 | 25.00 | 23.30 | 20.00 |
| 3 | 10.00 | 8.30 | 5.00 | 10 | 27.50 | 25.80 | 22.50 |
| 4 | 12.50 | 10.80 | 7.50 | 11 | 30.00 | 28.30 | 25.00 |
| 5 | 15.00 | 13.30 | 10.00 | 12 | 32.50 | 30.80 | 27.50 |
| 6 | 17.50 | 15.80 | 12.50 | 13 | 35.00 | 33.30 | 30.00 |
| 7 | 20.00 | 18.30 | 15.00 | 14 | 37.50 | 35.80 | 32.50 |
| 8 | 22.50 | 20.80 | 17.50 | 15 | 40.00 | 38.30 | 35.00 |

| PART NO | Material | Material(Pin) | Finish(Pin) | Suitable XKB Terminal |
|---|---|---|---|---|
| X2508WV−04−N0SN | Nylon 66 UL 94V−0 | Brass | Tin Plated | X2508H |

| AuGLAR | ±5° |
|---|---|
| X. | ±0.40 |
| X.x | ±0.30 |
| X.xx | ±0.20 |
| X.xxx | ±0.15 |
| UNSPECIFIED TOLERAuCES | |

XKB Connection 星创

| DESIGN | 阿树 | VIEW: | MODEL TYPE: 2.50mm Crimp Style Connectors |
|---|---|---|---|
| CHECKED | | UNIT: mm/in | PART NO.: X2508WV−04−N0SN |
| APPROVED | | SIZE: A4 | DWG NO.: X−X2508WV−04−N0SN |

XKB INDUSTRIAL PRECISION CO.,LIMITED

| SCALE | PAGE | REVISION |
|---|---|---|
| N/A | 1/1 | A1 |