REVISIONS					
REV.	ECN NO.	LOCATION	DESCRIPTION	DATE	DESIGN
A0	N/A		INITIAL RELEASE	/	/
A1	N/A		产品外观变更，图面升级整理图面	2025.03.14	阿树

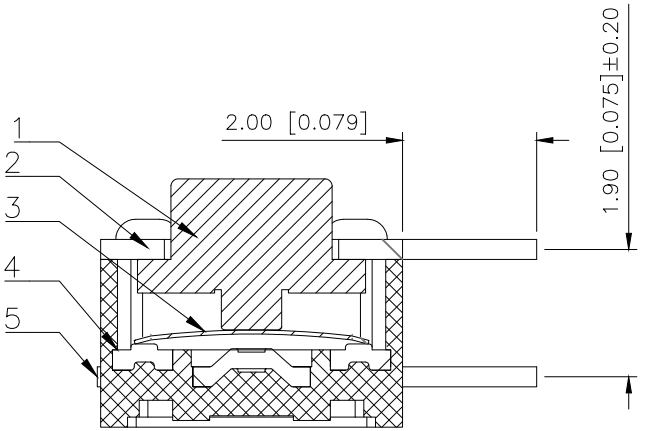

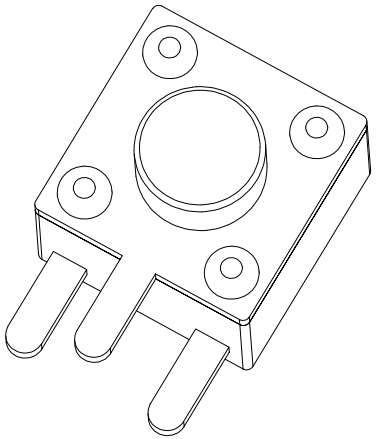

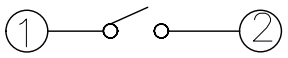

CIRCUTI DIAGEAM

Code-X	H
A	3.8
B	4.3
C	4.5
D	5.0
E	5.5
F	6.0
G	6.5
H	7.0
I	7.5
J	8.0
K	8.5
L	9.0

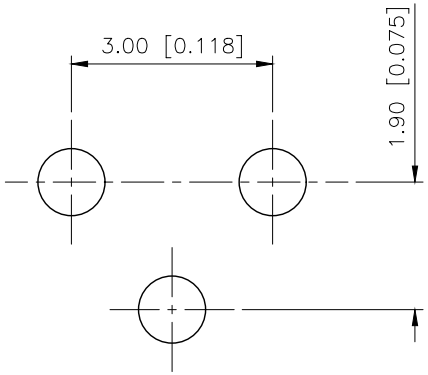

PCB.Circuit poribbited area

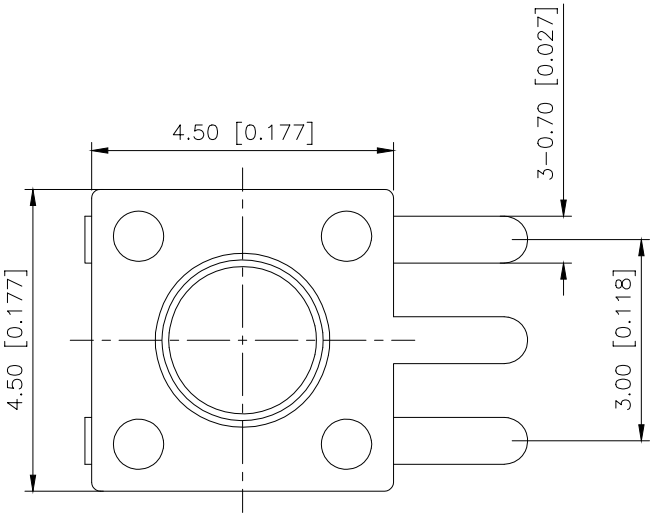

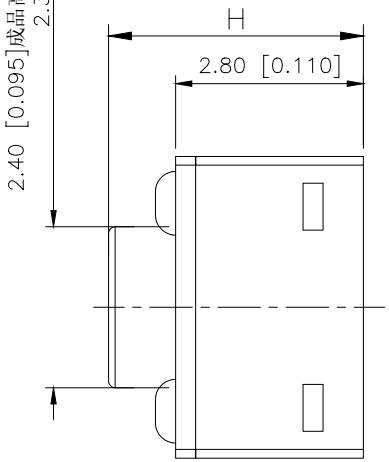

PAPT NO	TC-1109DE-B-A
Operating Force	A:100gf B:160gf C:260gf
Height	Code-x

Remarks:
1.Rated current、Voltage:DC 12V 50mA
2.Contact resistance: ≤100 mΩ
3.Insulation resistance: ≥100 MΩ
4.The intensity of operations: 250 ±50gf
5.Life requirements: 50000 times
6.Withstand voltage: AC250V 1 minute
7.All materials comply with RoHS standards
8.Operating temperature rangei: -20℃～+70℃
9.Travel to closure:0.20±0.10mm

ITEM	PAPT NAMF	MATERIAL	QTY	FINISHING
⑤	Terminal	Brass	2	Ag Plating
④	Shrapnel	Sus	1	Ag Plating
③	Housing	PPA	1	Black
②	Cover	Brass	1	Ni Plating
①	Button	PPA	1	Black

AuGLAR	±5°
X.	±0.40
X.x	±0.30
X.xx	±0.20
X.xxx	±0.15
UNSPECIFIED TOLERAuCES	

XKB Connection 星坤

DESIGN	阿树	VIEW:	MODEL TYPE: TACT SWITCH
CHECKED		UNIT: mm/in	PART NO.: TC-1109DE-B-A
APPROVED		SIZE: A4	DWG NO.: TC-1109DE-B-A

XKB INDUSTRIAL PRECISION CO.,LIMITED

SCALE	PAGE	REVISION
N/A	1/1	A1

www.helloxkb.com www.helloxkb.cn www.xk-dg.cn