REVISIONS					
REV.	ECN NO.	LOCATION	DESCRIPTION	DATE	DESIGN
A1	N/A		图框升级整理图面	2024.08.07	阿 树

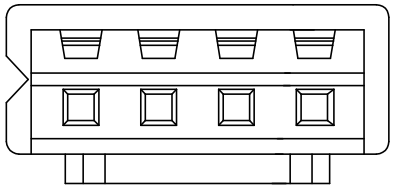

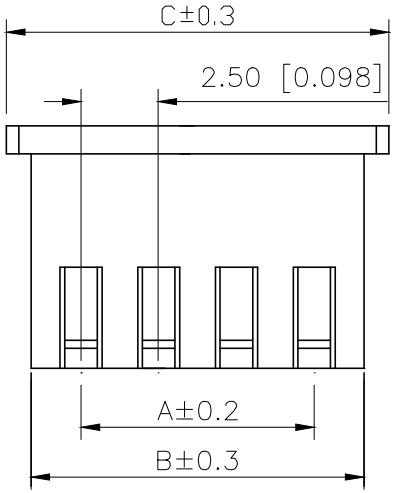

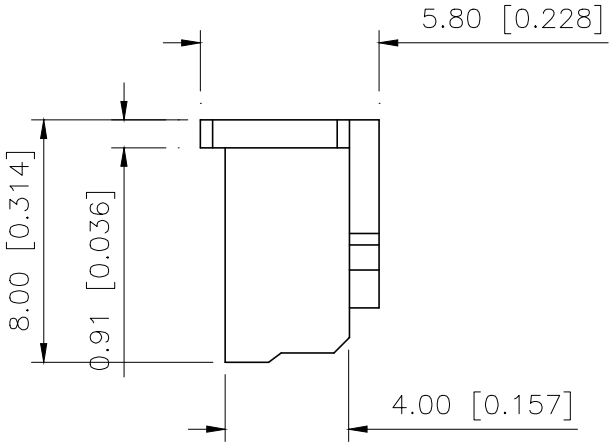

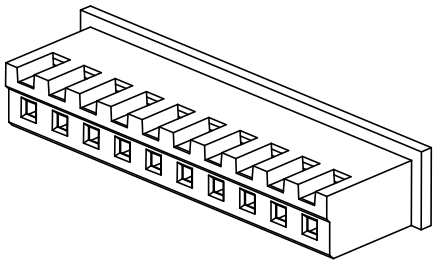

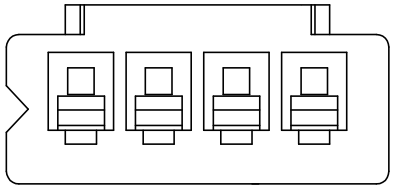

■SPECIFICATIONS
- Voltage rating:250V AC/DC
- Current rating:3A AC/DC
- Withstanding Voltage:1500V AC/minute
- Temperature range:−45°C+125°C
- Insulation resistance:≥1000MΩ
- Contact resistance:≤10mΩ
- After environmental testing:≤20mΩ

PART NO.:

X8821 H M 05−N0
① ② ③ ④ ⑤

① Series No
② Category:H−HSG
③ Welding Board Angle: M−Male HGS
④ Row No−Pin No: 2xXX−2x02P~2x16P
⑤ Material:N0−PA66 94V−0

Poles	Dimensions(mm)			Poles	Dimensions(mm)		
	A	B	C		A	B	C
02	2.50	5.70	7.50	12	27.50	30.70	32.50
03	5.00	8.20	10.00	13	30.00	33.20	35.00
04	7.50	10.70	12.50	14	32.50	35.70	37.50
05	10.00	13.20	15.00	15	35.00	38.20	40.00
06	12.50	15.70	17.50	16	37.50	40.70	42.50
07	15.00	18.20	20.00				
08	17.50	20.70	22.50				
09	20.00	23.20	25.00				
10	22.50	25.70	27.50				
11	25.00	28.20	30.00				

PART N0	Material	Suitable XKB Terminal	Suitable XKB Wafer
X8821HM−05−N0	Nyoln 66 UL 94V−0	X8821T	X8821W

ANGLAR	±5°
X.	±0.40
X.x	±0.30
X.xx	±0.20
X.xxx	±0.15
UNSPECIFIED TOLERANCES	

XKB INDUSTRIAL PRECISION CO.,LIMITED

DESIGN	阿 树	VIEW:	MODEL TYPE: 2.50 mm Crimp Style Connectors
CHECKED		UNIT: mm/in	PART NO.: X8821HM−05−N0
APPROVED		SIZE: A4	DWG NO.: X−X8821HM−05−N0

SCALE	PAGE	REVISION
N/A	1/1	A1