REVISIONS					
REV.	ECN NO.	LOCATION	DESCRIPTION	DATE	DESIGN
A0	N/A		INITIAL RELEASE	/	/
A1	N/A		图面升级整理图面	2024.9.27	阿树

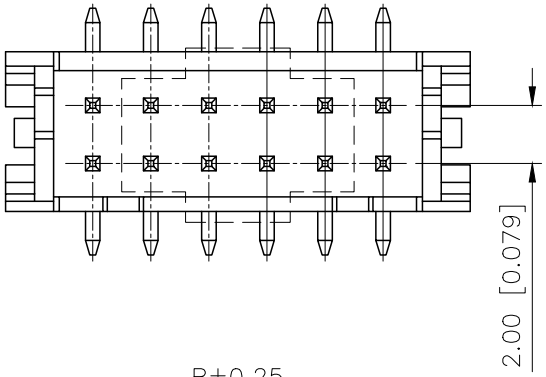

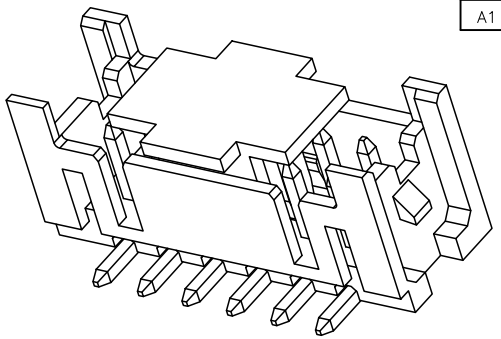

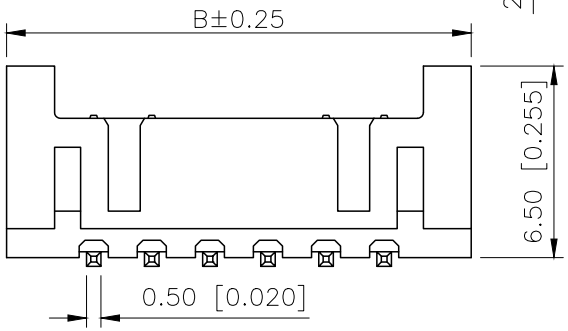

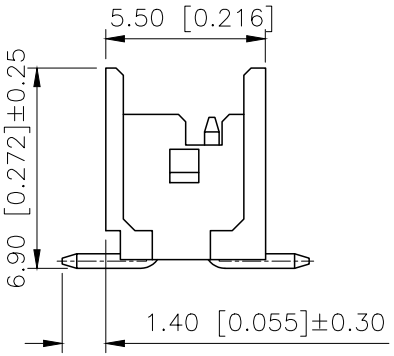

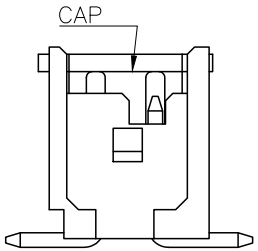

PART NO.:

X2026 W V S-2x17 A-6T SN
① ② ③ ④ ⑤ ⑥ ⑦ ⑧

①Series No
②Category:W-Wafer
③Welding Board Angle:V-Stright 180°
④Welding Way:S-SMT
⑤Row No.Pin No:2xXX-2x02~2x20Pin
⑥Plug the Pin&Special N0:
A-With Lock on both side
⑦Material:6T-PA6T 94V-0;
⑧Plating Category:SN-Bright Tin Plating
SW-Matte Tin

Poles	Dimensions(mm)	
	A	B
2x02	2.00	8.00
2x03	4.00	10.00
2x04	6.00	12.00
2x05	8.00	14.00
2x06	10.00	16.00
2x07	12.00	18.00
2x08	14.00	20.00
2x09	16.00	22.00
2x10	18.00	24.00
2x11	20.00	26.00
2x12	22.00	28.00
2x20	38.00	44.00

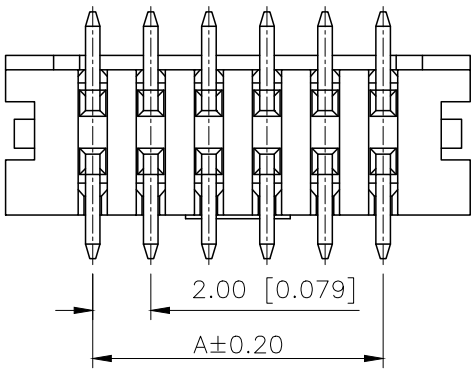

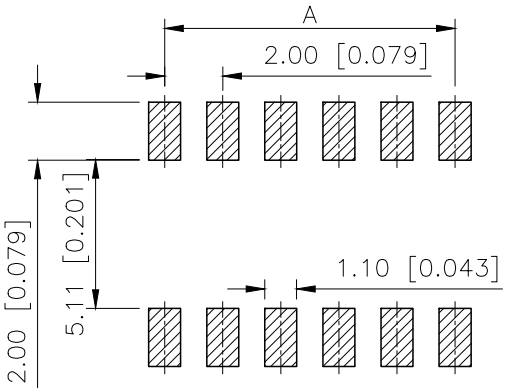

PCB LAYOUT

■SPECIFICATIONS
•Voltage rating:250V AC/DC
•Current rating:3A AC/DC
•Withstanding Voltage:800V AC/minute
•Temperature range:-40°C~+125°C
•Insulation resistance:≥1000MΩ
•Contact resistance:≤10mΩ
•After environmental testing:≤20mΩ

PART NO	Material	Plating	Suitable XKB Housing
X2026WVS-2x17A-6TSN	PA6T	Tin	X2026H

AuGLAR	±5°
X.	±0.40
X.x	±0.30
X.xx	±0.20
X.xxx	±0.15
UNSPECIFIED TOLERAuCES	

XKB Connection 星创

DESIGN	阿树	VIEW:	MODEL TYPE: 2.00mm Crimp Style Connector
CHECKED		UNIT: mm/in	PART NO.: X2026WVS-2x17A-6TSN
APPROVED		SIZE: A4	DWG NO.:

XKB INDUSTRIAL PRECISION CO.,LIMITED

SCALE	PAGE	REVISION
N/A	1/1	A1