REVISIONS					
REV.	ECN NO.	LOCATION	DESCRIPTION	DATE	DESIGN
A0	N/A		INITIAL RELEASE	/	/
A1	N/A			2025.10.13	

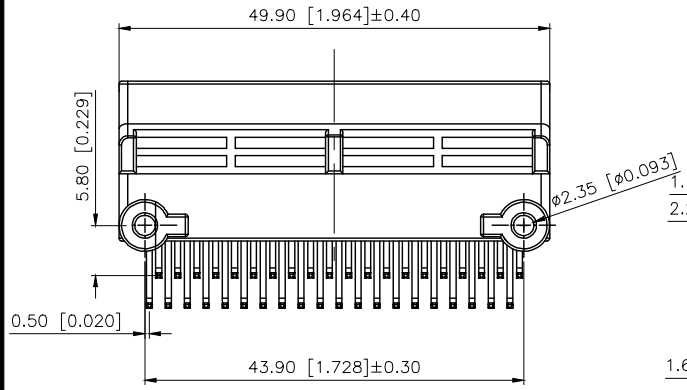

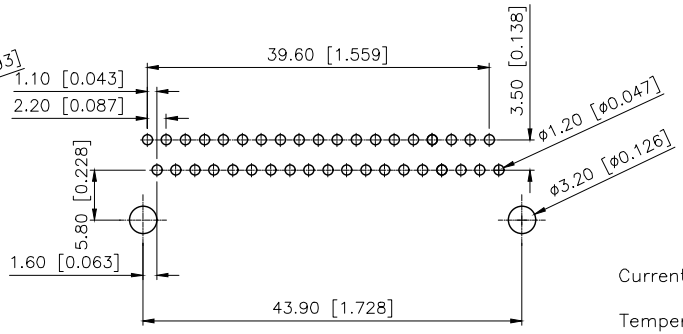

PCB Layout

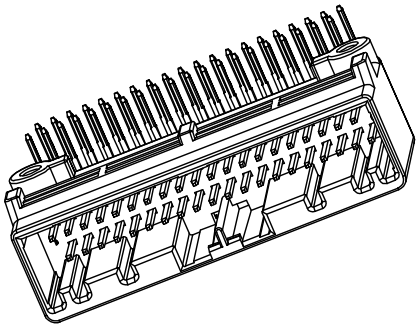

Current rating:3A AC/DC
3A AC/DC
Temperature range:−40 −+125
−40 −+125

PART NO.:

K 137635 W R−2x20 B PT SN

K:XKBTEK−Car Connector
XKB Series No
Categoiy:W−Wafer
Welding Board Aagle:R−Straight 90˚
Row No.Pin No:2x20 Pin
Special No:B−Misaligned foot
Material:PT−PBT
Palting:SN−Plated Tin

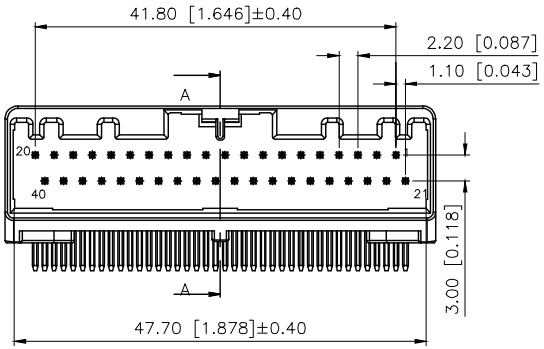

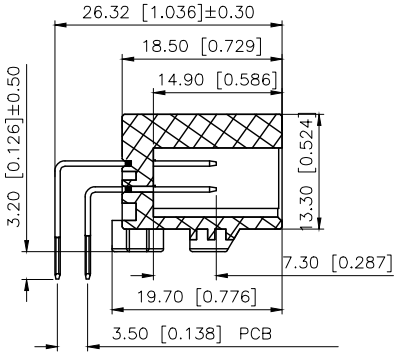

SEC:A−A

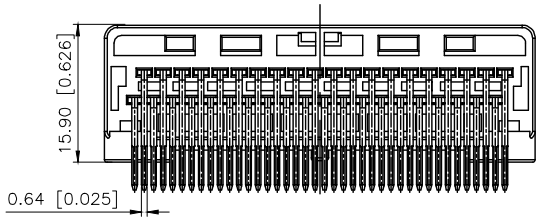

PART NO	Material	Color	Material(Pin)	Suitable XKB Housing
K137635WR−2x20B−PTSN	PBT	Gray	Brass	K137635H−B

AuGLAR	±5˚
X.	±0.40
X.x	±0.30
X.xx	±0.20
X.xxx	±0.15
UNSPECIFIED TOLERAuCES	

XKB Connection

DESIGN		VIEW:	MODEL TYPE: 2.2mm Automobile connector
CHECKED		UNIT: mm/in	PART NO.: K137635WR−2x20B−PTSN
APPROVED		SIZE: A4	DWG NO.:

XKB INDUSTRIAL PRECISION CO.,LIMITED

SCALE	PAGE	REVISION
N/A	1/1	A1