REVISIONS					
REV.	ECN NO.	LOCATION	DESCRIPTION	DATE	DESIGN
A1	N/A		图面升级整理图面	2025.06.04	阿树
A2	ECN-P-2026031201	A2 X4	产品材质，电气性能及尺寸变更	2026.03.12	阿树

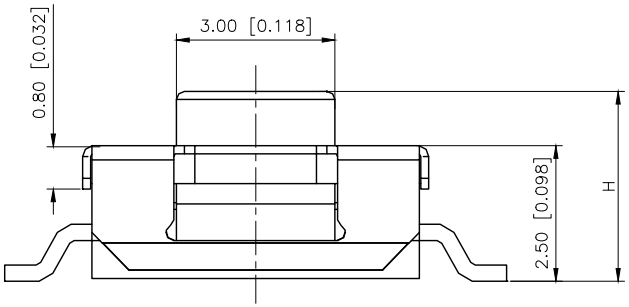

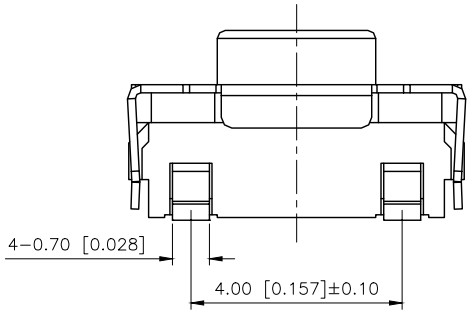

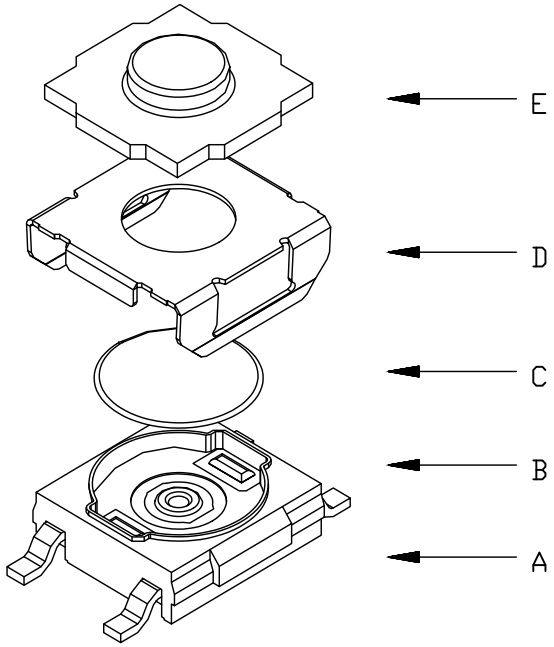

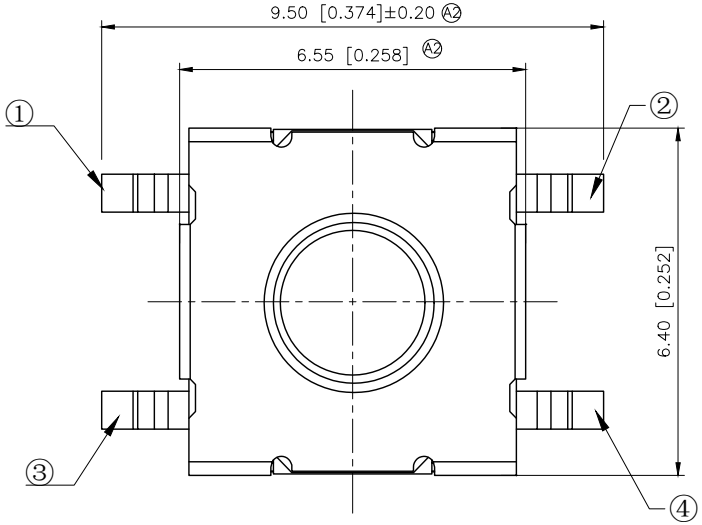

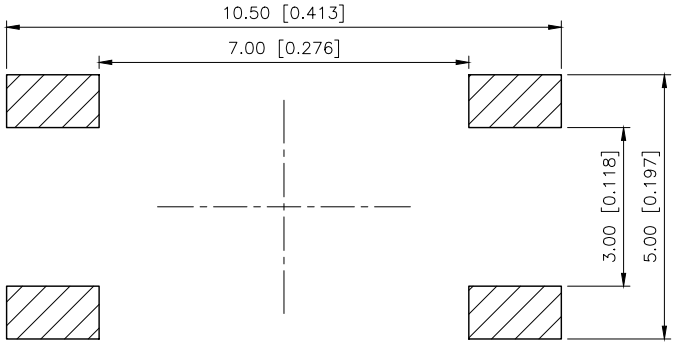

PCB Mounting pattern Dimension

PAPT NO	TS-1158B-C-B-BL
Operating Force	B:160gf C:260gf E:400gf
Height	H: A:3.1 B:3.5 C:4.3 D:5.0
Color	BL:blue W:white

SPECIFICATION
Contact Rating: 50mA,12V DC
Contact Resistance: 100mΩ max
Insulation Resistance: 100MΩ min.500V DC
Dielectric Strength: 250V AC/1minute
Travel: 0.40±0.20mm A2
Operating force:±50gf
Operating Temp: -40℃~+85℃ A2
Storage Temp -40℃~+85℃

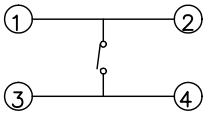

Circuit Diagram

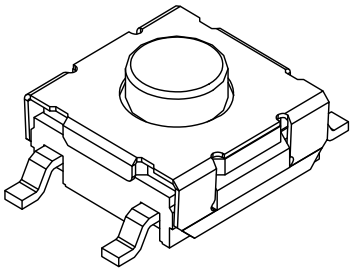

ITEM	PAPT NAME	QTY	MATERIAL	FINISH/COLOR
E	Button	1	Silica gel	
D	Cover	1	SUS	
C	Contact	1	SUS	Ag-Plating
B	Base	1	PPA	Black
A	Cards	1	Brass	Ag-Plating

AuGLAR	±5°
X.	±0.40
X.x	±0.30
X.xx	±0.20
X.xxx	±0.15
UNSPECIFIED TOLERAuCES	

XKB Connection 星创

DESIGN	阿树	VIEW:	MODEL TYPE: TACT SWITCH
CHECKED		UNIT: mm/in	PART NO.: TS-1158B-C-B-BL
APPROVED		SIZE: A4	DWG NO.:

XKB INDUSTRIAL PRECISION CO.,LIMITED

SCALE	PAGE	REVISION
N/A	1/1	A2