REVISIONS					
REV.	ECN NO.	LOCATION	DESCRIPTION	DATE	DESIGN
A0	N/A		INITIAL RELEASE	/	/
A1	N/A		图纸更正，图面升级整理图面	2024.9.04	阿树

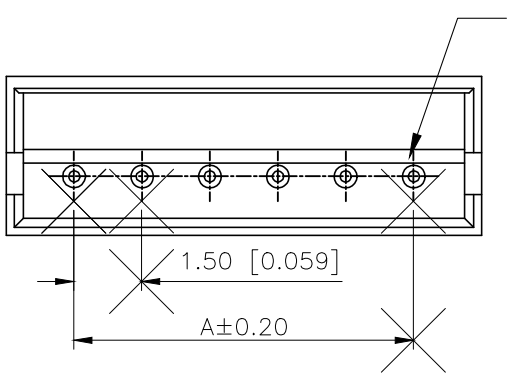

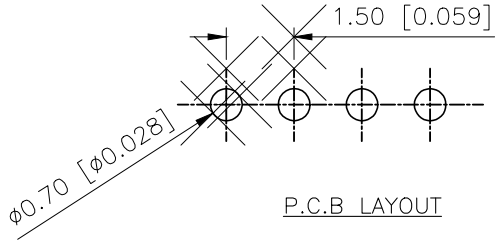

P.C.B LAYOUT

■SPECIFICATIONS
- •Voltage rating:100V AC/DC
- •Current rating:1A AC/DC
- •Withstanding Voltage:500V AC/minute
- •Temperature range:−40°C~+125°C
- •Insulation resistance:≥500MΩ
- •Contact resistance:≤20mΩ

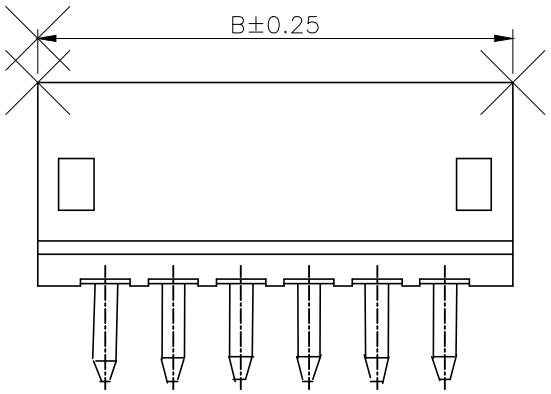

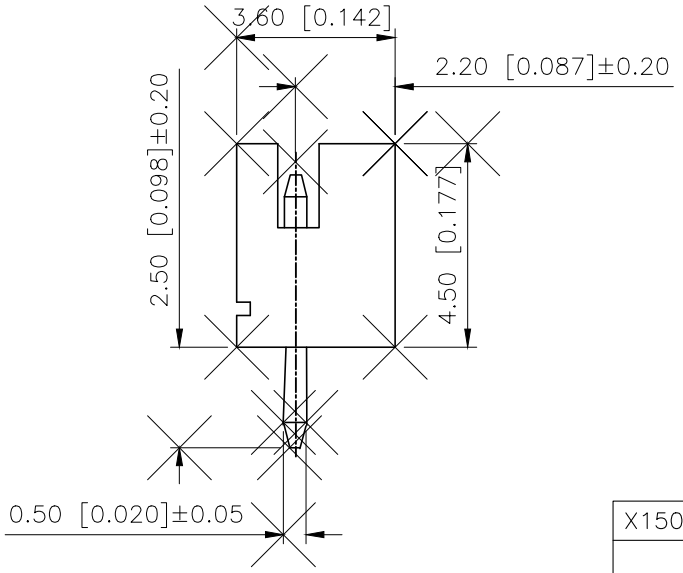

PART NO.:

X1502 W V−11−46 V03
① ② ③ ④ ⑤ ⑥

①Series No
②Category:W−Wafer
③Welding Board Angle:V−Stright 180°
④Row No.Pin No:XX−02~20Pin
⑤Material:46−PA46 UL94V−0
⑥Planting:V03−Gold 3u"

Poles	Dimensions (mm)	
	A	B
02	1.50	4.50
03	3.00	6.00
04	4.50	7.50
05	6.00	9.00
06	7.50	10.50
07	9.00	12.00
08	10.50	13.50
09	12.00	15.00
10	13.50	16.50
11	15.00	18.00
12	16.50	19.50
13	18.00	21.00
20	20.50	31.50

X1502WV−11−46V03	PA46	Brass	X1502H
PART NO	Material	Material(Pin)	Suitable XKB Housing

AuGLAR	±5°
X.	±0.40
X.x	±0.30
X.xx	±0.20
X.xxx	±0.15
UNSPECIFIED TOLERAuCES	

XKB 星创 Connection

DESIGN	阿树	VIEW:	MODEL TYPE: 1.50mm Crimp Style Connectors
CHECKED		UNIT: mm/in	PART NO.: X1502WV−11−46V03
APPROVED		SIZE: A4	DWG NO.: X−X1502WV−11−46V03

XKB INDUSTRIAL PRECISION CO.,LIMITED

SCALE	PAGE	REVISION
N/A	1/1	A1