REVISIONS					
REV.	ECN NO.	LOCATION	DESCRIPTION	DATE	DESIGN
A0	N/A		INITIAL RELEASE	/	/
A1	N/A		图面升级整理图面	2024.11.26	阿树

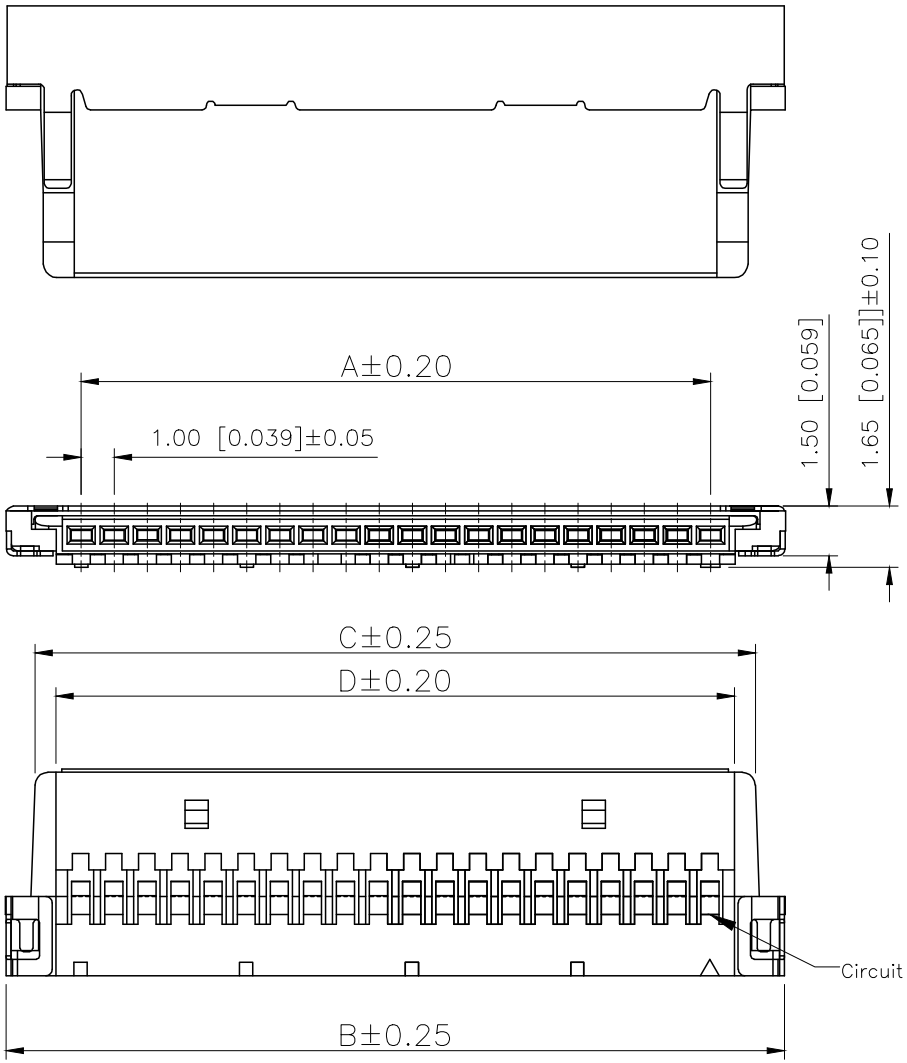

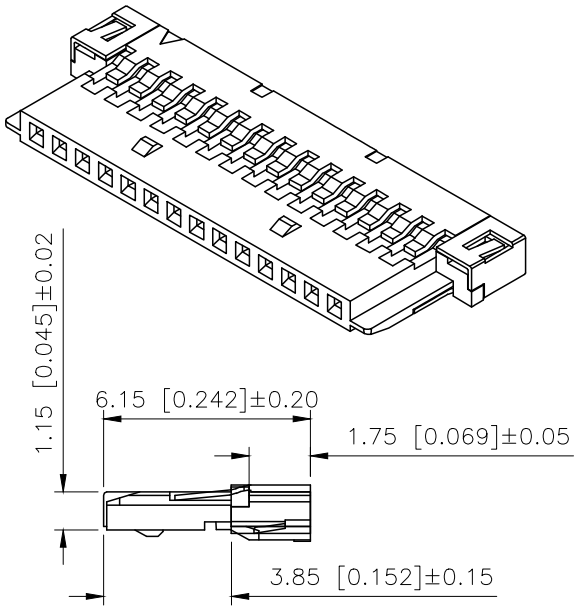

Specifications:
规格：
Voltage rating:100V AC/DC
额定电压：100V AC/DC
Current rating:1A AC/DC
额定电流：1A AC/DC
Withstanding voltage:500V AC/minute
耐受电压：500V AC/分钟
Temperature range:−40℃−+125℃
温度范围：−40℃−+125℃
Insulation resistance:≥500MΩ
绝缘电阻：≥500MΩ
Contact resistance:≤30mΩ
接触电阻：≤30mΩ
After environmental testing:≤40mΩ
环境测试后：≤40兆欧

PART NO.:

X1008 H−20−46 XX
① ② ③ ④ ⑤

①Series No
②Category:H−HSG
③Row No.Pin No:XX−08~30Pin
④Material:46−PA46 UL94V−0;
LP−LCP 94V−0
⑤Color:Blank−natural color

Poles	Dimensions(mm)			
	A	B	C	D
8	7.00	11.50	9.85	8.50
20	19.00	23.50	21.85	20.50
30	29.00	33.50	31.85	30.50

PART NO	Material	Material(Shell)	Suitable XKB Terminal	Suitable XKB Terminal
X1008H−XX−LP	LCP UL 94V−0	Stainless Steel	X1008T	X1008W
X1008H−20−46	Nylon 46 UL 94V−0			

AuGLAR	±5°
X.	±0.40
X.x	±0.30
X.xx	±0.20
X.xxx	±0.15
UNSPECIFIED TOLERAuCES	

XKB 星创 Connection

DESIGN	阿树	VIEW:	MODEL TYPE: 1.00mm Crimp Style Connectors
CHECKED		UNIT: mm/in	PART NO.: X1008H−20−46
APPROVED		SIZE: A4	DWG NO.:

XKB INDUSTRIAL PRECISION CO.,LIMITED

SCALE	PAGE	REVISION
N/A	1/1	A1