REVISIONS					
REV.	ECN NO.	LOCATION	DESCRIPTION	DATE	DESIGN
A0	N/A		INITIAL RELEASE	/	/
A1	N/A		图面升级整理图面	2025.07.29	阿树

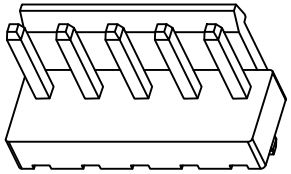

3D图示（参考）

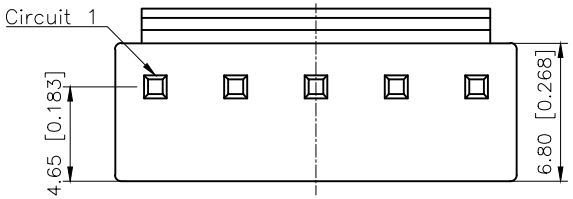

04P~10P

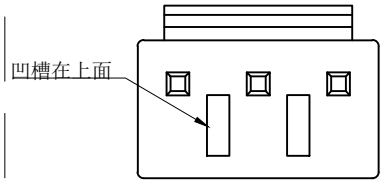

02P~03P

■SPECIFICATIONS
- Voltage rating:250V AC/DC
- Current rating:7A AC/DC
- Withstanding Voltage:1500V AC/minute
- Temperature range:−40°C~+125°C
- Insulation resistance:≥1000MΩ
- Contact resistance:≤20mΩ

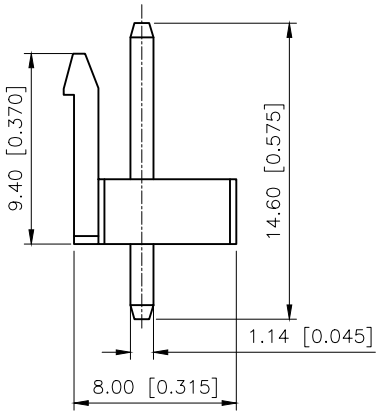

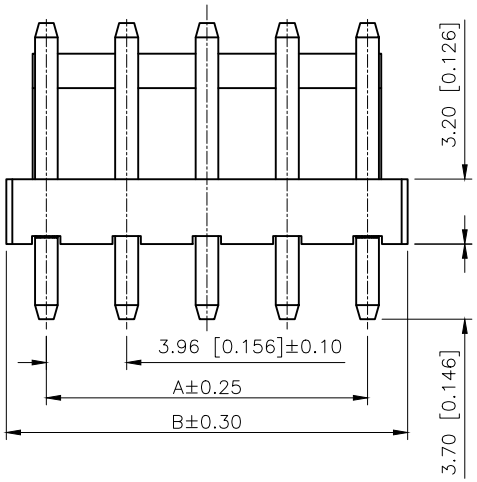

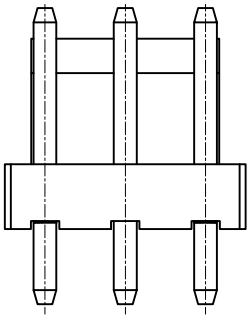

PART NO.:

X9396 W V−16−46 SN
① ② ③ ④ ⑤ ⑥

①Series No
②Category:W−Wafer
③Welding Board Angle:V−Stright 180°
④Row No.Pin No:XX−02~15Pin
⑤Material:N0−PA66 UL94V−0
⑥Planting: SN−Bright tin plating

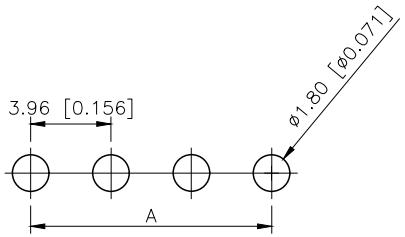

PCB LAYOUT

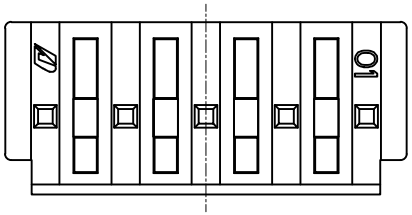

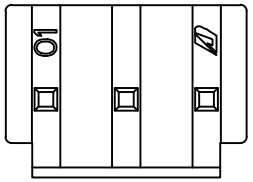

Poles	Dimensions(mm)	
	A	B
02	3.96	7.92
03	7.92	11.88
04	11.88	15.84
05	15.84	19.80
06	19.80	23.76
07	23.76	27.72
08	27.72	31.68
09	31.68	35.64
10	35.64	39.60

X9396WV−16−46SN	PA66	Brass	TIN−plating	X9396H
PART NO	Material	Material(Pin)	Finish	Suitable XKB Housing

AuGLAR	±5°
X.	±0.40
X.x	±0.30
X.xx	±0.20
X.xxx	±0.15
UNSPECIFIED TOLERAuCES	

XKB Connection 星创

DESIGN	阿树	VIEW:	MODEL TYPE: 3.96mm Crimp Style Connectors
CHECKED		UNIT: mm/in	PART NO.: X9396WV−16−46SN
APPROVED		SIZE: A4	DWG NO.:

XKB INDUSTRIAL PRECISION CO.,LIMITED

SCALE	PAGE	REVISION
N/A	1/1	A1