REVISIONS					
REV.	ECN NO.	LOCATION	DESCRIPTION	DATE	DESIGN
A0	N/A		INITIAL RELEASE	/	/
A1	N/A		图面升级整理图面	2025.2.14	阿树

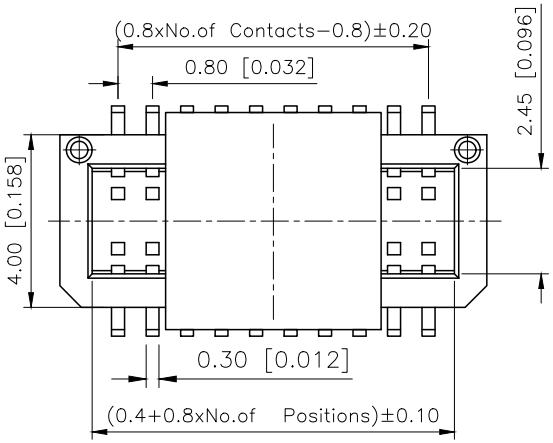

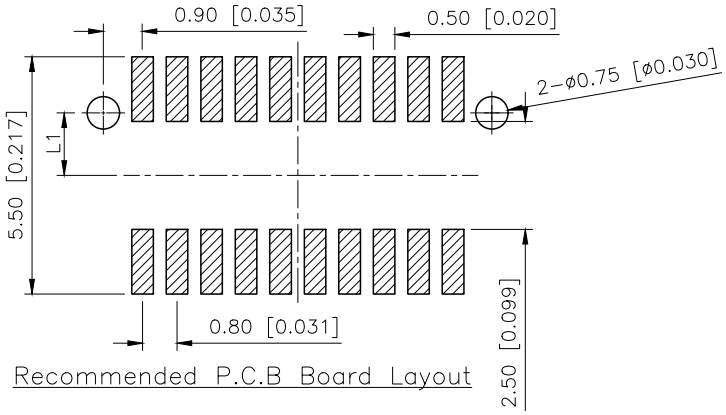

Recommended P.C.B Board Layout

Specifications:
规格：
Voltage rating:50V AC/DC
额定电压：50V AC/DC
Current rating:0.5A AC/DC
额定电流：0.5A AC/DC
Withstanding voltage:300V AC/minute
耐受电压：300V AC/分钟
Temperature range:−40℃−+105℃
温度范围：−40℃−+105℃
Insulation resistance:1000MΩ min
绝缘电阻：1000MΩ Min
Contact resistance:20mΩ Max
接触电阻：20mΩ Max

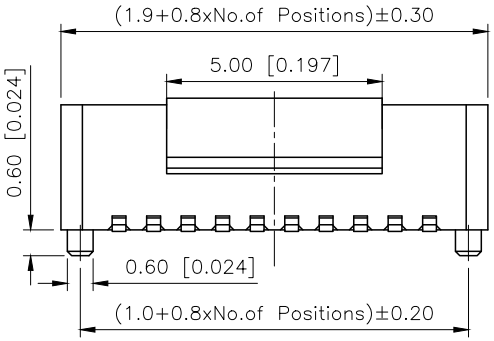

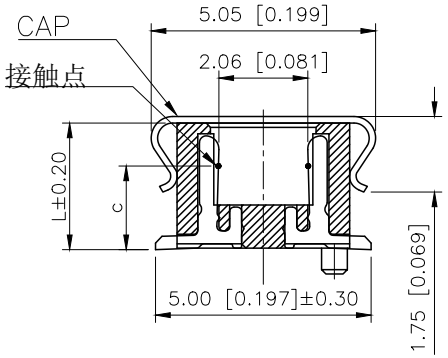

PART NO.:

X0814 F V S−2x18 A −9T V01
① ② ③ ④ ⑤ ⑥ ⑦ ⑧

①Series No
②Category:F−Female
③Welding Board Angle:V−Stright 180°
④Welding Way: S−SMT
⑤Row No.Pin No:2xXX−2x02~2x25P
⑥Height:A=2.9mm; B=3.4mm; C=3.9; C1=3.9
⑦Material:9T−PA9T UL94V−0
⑧Plating:V01−Gold Flash ;
SN−Tin Plated

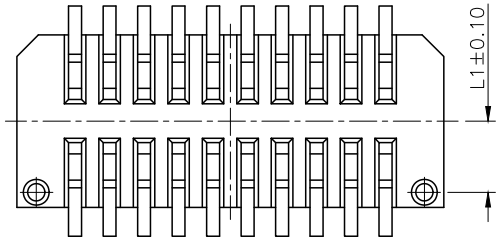

Mating Height	PLUG	SOCKET	L	L1	C(Ref)
A=4.0	2.80	A=2.90	2.90	1.65	1.94
B=4.5	3.30				
C=5.0	3.80				
D=5.5	4.30	B=3.40	3.40	1.65	1.94
E=6.0	4.80				
F=6.5	5.30				
G=7.0	5.30	C=3.90	3.90	1.65	2.44
		C1=3.9	3.90	1.25	2.44

PART NO	Material	Material(Pin)	Suitable XKB Wafer
X0814FVS-2x18A-9TV01	Nylon 9T	Phosphor Bronze	X0814W

AuGLAR	±5°
X.	±0.40
X.x	±0.30
X.xx	±0.20
X.xxx	±0.15
UNSPECIFIED TOLERAuCES	

XKB Connection 星创

DESIGN	阿树	VIEW:	MODEL TYPE: 0.8mm BTB Connectors
CHECKED		UNIT: mm/in	PART NO.: X0814FVS−2x18A−9TV01
APPROVED		SIZE: A4	DWG NO.:

XKB INDUSTRIAL PRECISION CO.,LIMITED

SCALE	PAGE	REVISION
N/A	1/1	A1