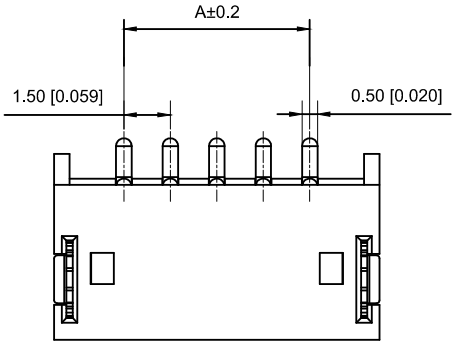

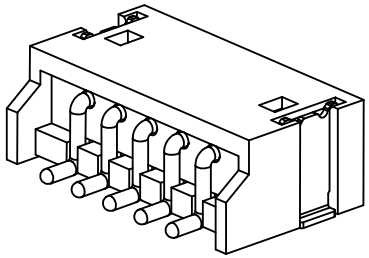

■ Specifications：

- Voltage rating: 50 V AC / DC
- Current rating: 1A AC / DC
- Withstanding voltage: 500V AC/minute
- Temperature range: -25°C~+85°C
- Insulation resistance: ≥500MΩ
- Contact resistance: ≤20mΩ
- After environmental testing：≤30mΩ

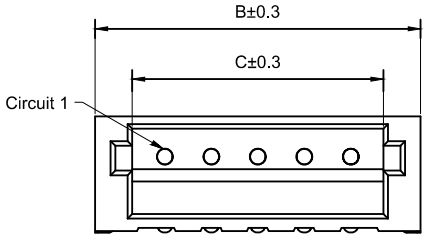

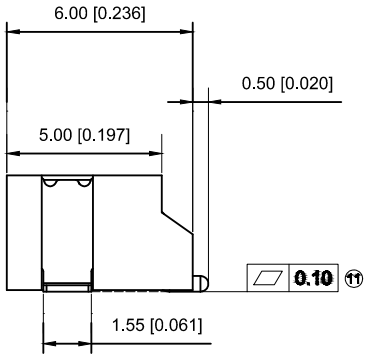

X1502 W R S-15-9T SN
① ② ③ ④ ⑤ ⑥ ⑦

① Series No.
② Category：W-WAFER
③ Welding Board Angle：R-Straight 90°
④ Welding Way:S-SMT
⑤ Row No.-Pin No.: XX-02P~15P
⑥ Material： 9T-PA9T;6T-PA6T;LP-LCP 94V-0
⑦ Plating Category: Sn-Bright Tin Plating

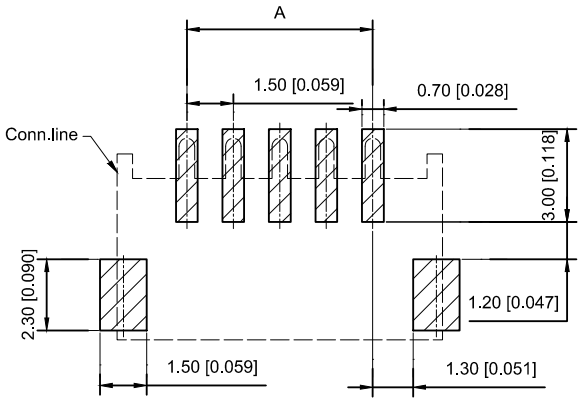

Recommended P.C.V Layout
General Tolerance±0.05

Poles	Dimensions(mm)			Poles	Dimensions(mm)		
	A	B	C		A	B	C
02	1.50	6.00	3.60	09	12.00	16.50	14.10
03	3.00	7.50	5.10	10	13.50	18.00	15.60
04	4.50	9.00	6.60	11	15.00	19.50	17.10
05	6.00	10.50	8.10	12	16.50	21.00	18.60
06	7.50	12.00	9.60	13	18.00	22.50	20.10
07	9.00	13.50	11.10	14	19.50	24.00	21.60
08	10.50	15.00	12.60	15	21.00	25.50	23.10

X1502WRS-15HF-LPSW	LCP UL 94V-0 Halogen Free	Brass	Tin-Plated	X1502T
X1502WRS-15-6TSN	PA6T UL 94V-0			
X1502WRS-15-9TSN	PA9T UL 94V-0			
PART N0	Material	Material(pin)	Finish(pin)	Suitable XKB Terminal

MARK	DESCRIPTION	DATE	REVISED	APPROVED
ΔX				
ΔX				
ΔX				

REVISIONS

UNSPECIFIED TOLERANCES	
ANGLAR	±5°
L≤4	±0.2
4<L≤16	±0.3
16<L≤63	±0.4
L>63	±0.5

DSND		DATE		SCALE: N/A
DWN		DATE		VIEW:
CHKD		DATE		UNIT: mm/in
APPD		DATE		SIZE: A4

XKB INDUSTRIAL PRECISION CO.,LIMITED

MODEL TYPE: 1.5mm Crimp Style Connectors
PART NO.: X1502WRS-15-9TSN
DWG NO.: X-X1502WRS-15-9TSN

WEIGHT	SHEET	REVISION
1.0g	1/1	A0