| REVISIONS | | | | | |
|---|---|---|---|---|---|
| REV. | ECN NO. | LOCATION | DESCRIPTION | DATE | DESIGN |
| A0 | N/A | | INITIAL RELEASE | / | / |
| A1 | N/A | | 新增开孔图定位柱直径尺寸，图面升级整理图面 | 2024.11.15 | 阿树 |

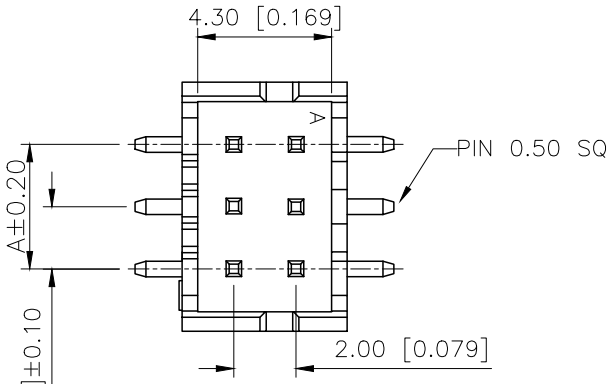


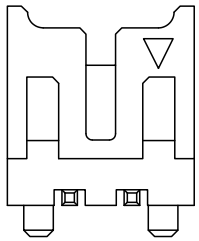

2P视图

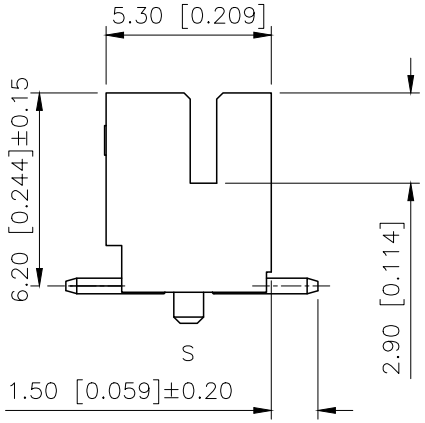


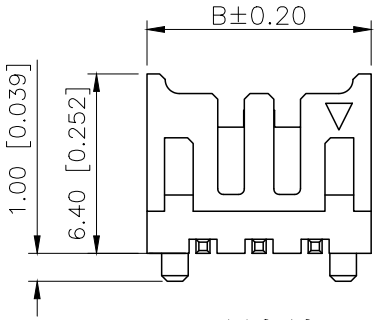


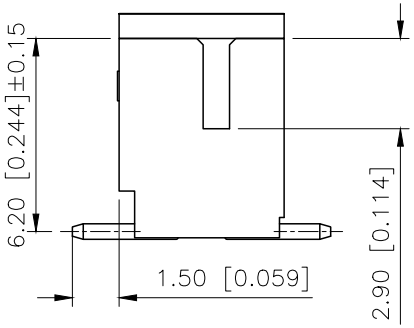


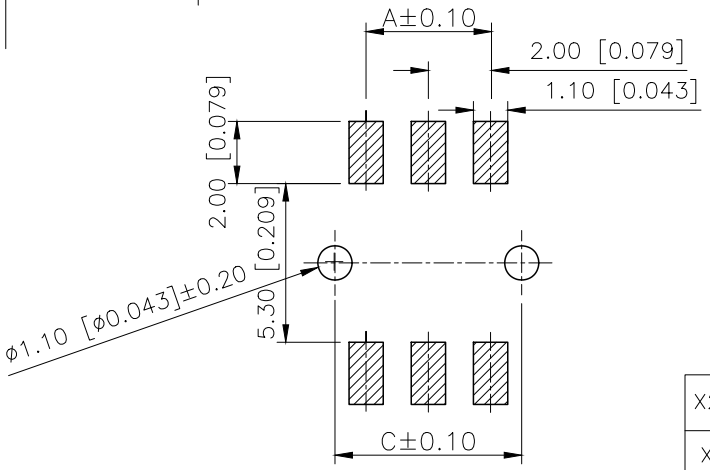


PCB LAYOUT

■SPECIFICATIONS
- Voltage rating:250V AC/DC
- Current rating:3A AC/DC
- Withstanding Voltage:800V AC/minute
- Temperature range:−40°C~+125°C
- Insulation resistance:≥1000MΩ
- Contact resistance:≤10mΩ
- After environmental testing:≤20mΩ

PART NO.:

X2026 W V S−2x15 S−9T SN XX
① ② ③ ④ ⑤ ⑥ ⑦ ⑧ ⑨

①Series No
②Category:W−Wafer
③Welding Board Angle:RV−Stright 180°
④Welding Way:S−SMT
⑤Row No.Pin No:2xXX−2x02~2x19Pin
⑥S−With the column
⑦Material:9T−PA9T 94V−0
⑧Plating Category:SN−Bright Tin Plating
⑨Color:Blank−Natural Color

| poles | Dimensions(mm) | | | poles | Dimensions(mm) | | | Poles | Dimensions(mm) | | |
|---|---|---|---|---|---|---|---|---|---|---|---|
| | A | B | C | | A | B | C | | A | B | C |
| 2x02 | 2.00 | 6.00 | 4.00 | 2x09 | 16.00 | 20.00 | 18.00 | 2x16 | 30.00 | 34.00 | 32.00 |
| 2x03 | 4.00 | 8.00 | 6.00 | 2x10 | 18.00 | 22.00 | 20.00 | 2x17 | 32.00 | 36.00 | 34.00 |
| 2x04 | 6.00 | 10.00 | 8.00 | 2x11 | 20.00 | 24.00 | 22.00 | 2x18 | 34.00 | 38.00 | 36.00 |
| 2x05 | 8.00 | 12.00 | 10.00 | 2x12 | 22.00 | 26.00 | 24.00 | 2x19 | 36.00 | 40.00 | 38.00 |
| 2x06 | 10.00 | 14.00 | 12.00 | 2x13 | 24.00 | 28.00 | 26.00 | | | | |
| 2x07 | 12.00 | 16.00 | 14.00 | 2x14 | 26.00 | 30.00 | 28.00 | | | | |
| 2x08 | 14.00 | 18.00 | 16.00 | 2x15 | 28.00 | 32.00 | 30.00 | | | | |

| PART NO | Material | Material(pin) | Finish(Pin) | Suitable XKB Terminal |
|---|---|---|---|---|
| X2026WVS−2x15S−9TSN | PA9T UL 94V−0 | Brass | Tin−Plated | X2026H−A |
| X2026WVS−2xXX−9TSN | PA9T UL 94V−0 | | | X2026H−A |

| AuGLAR | ±5° |
|---|---|
| X. | ±0.40 |
| X.x | ±0.30 |
| X.xx | ±0.20 |
| X.xxx | ±0.15 |
| UNSPECIFIED TOLERAuCES | |

XKB Connection

| | | | |
|---|---|---|---|
| DESIGN | 阿树 | VIEW: | MODEL TYPE: 2.00mm Crimp Style Connector |
| CHECKED | | UNIT: mm/in | PART NO.: X2026WVS−2x15S−9TSN |
| APPROVED | | SIZE: A4 | DWG NO.: |

XKB INDUSTRIAL PRECISION CO.,LIMITED

| SCALE | PAGE | REVISION |
|---|---|---|
| N/A | 1/1 | A1 |