REVISIONS					
REV.	ECN NO.	LOCATION	DESCRIPTION	DATE	DESIGN
A1	N/A		图框升级整理图面	2024.07.22	阿 树

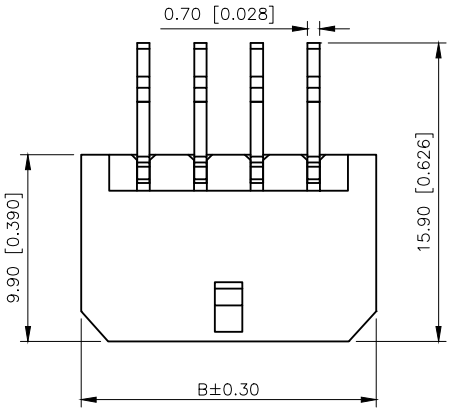

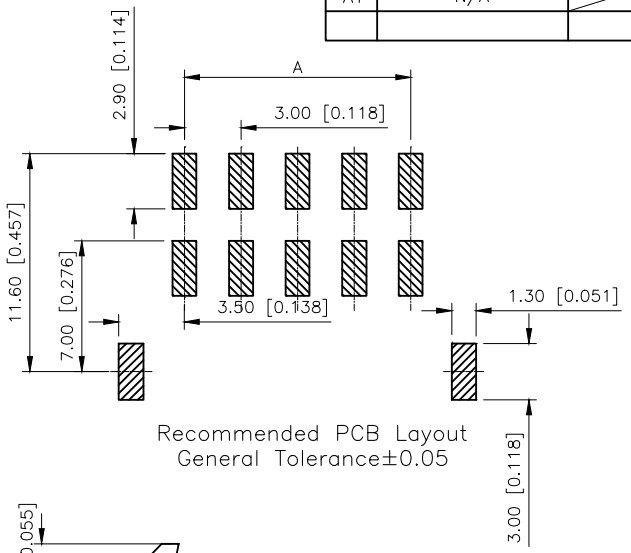

Recommended PCB Layout
General Tolerance±0.05

■SPECIFICATIONS
- •Voltage rating:250V AC/DC
- •Current rating:5A AC/DC
- •Withstanding Voltage:1000V AC/minute
- •Temperature range:−45°C+125°C
- •Insulation resistance:≥1000MΩ
- •Contact resistance:≤10mΩ
- •After environmental testing: ≤20mΩ

PART NO.:

X3025 W R S−2x04 E−LP SW
① ② ③ ④ ⑤ ⑥ ⑦ ⑧

① Series No
② Category:W−Wafer
③ Welding Board Angle:R−Stright 90°
④ Welding Way:S−SMT
⑤ Row No−Pin No: 2xXX−2x01P~2x12P
⑥ Plug the Pin & Special No:E−Type E
⑦ Material:LP−LCP L94V−0
⑧ Planting:SW−Fog Tin plating

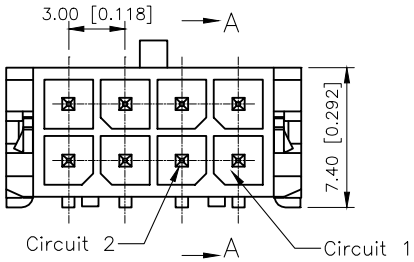

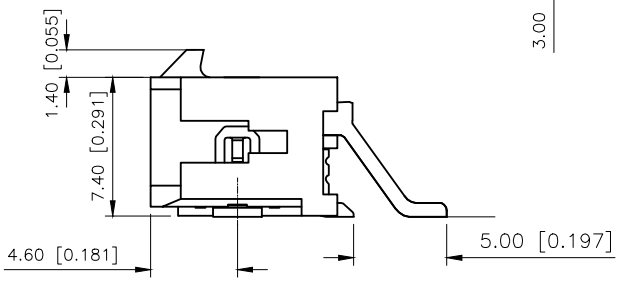

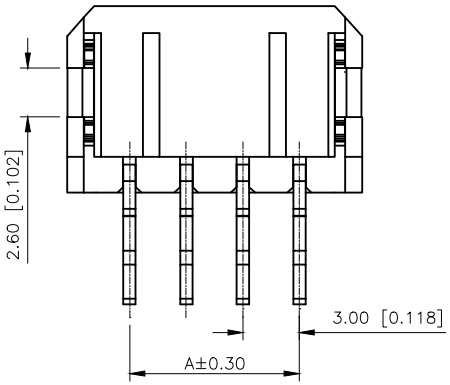

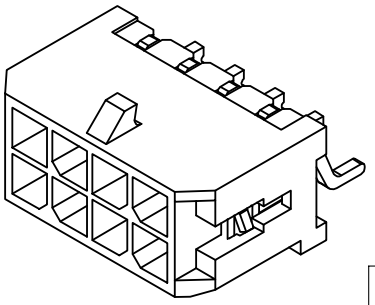

Poles	Dimensions (mm)		Poles	Dimensions (mm)	
	A	B		A	B
2x01	---	6.65	2x07	18.00	24.65
2x02	3.00	9.65	2x08	21.00	27.65
2x03	6.00	12.65	2x09	24.00	30.65
2x04	9.00	15.65	2x10	27.00	33.65
2x05	12.00	18.65	2x11	30.00	36.65
2x06	15.00	21.65	2x12	33.00	39.65

X3025WRS−2x04E−LPSW	LCP UL 94V−0	Brass	Tin−Plated	Brass	Tin Plated	X3025H
PART NO	Material	Material(Pin)	Finish(Pin)	Material (Solder Tabs)	Finish (Solder Tabs)	Mates With XKB Housing

ANGLAR	±5°
X.	±0.40
X.x	±0.30
X.xx	±0.20
X.xxx	±0.15
UNSPECIFIED TOLERANCES	

XKB

DESIGN	阿 树	VIEW:	MODEL TYPE: 3.00 mm Crimp Style Connectors
CHECKED		UNIT: mm/in	PART NO.: X3025WRS−2x04E−LPSW
APPROVED		SIZE: A4	DWG NO.: X−X3025WRS−2x04E−LPSW

XKB INDUSTRIAL PRECISION CO.,LIMITED

SCALE	PAGE	REVISION
N/A	1/1	A1