REVISIONS					
REV.	ECN NO.	LOCATION	DESCRIPTION	DATE	DESIGN
A0	N/A		INITIAL RELEASE	/	/
A1	N/A		图面升级整理图面	2025.06.17	阿树

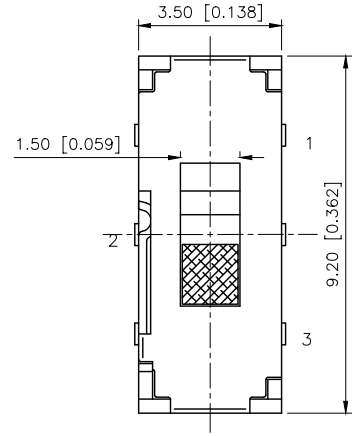

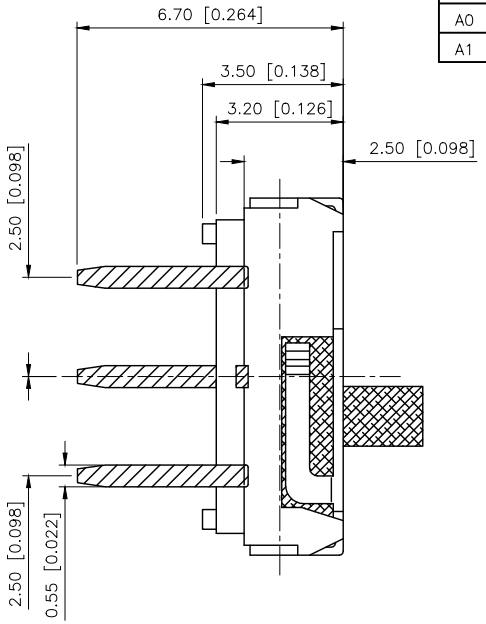

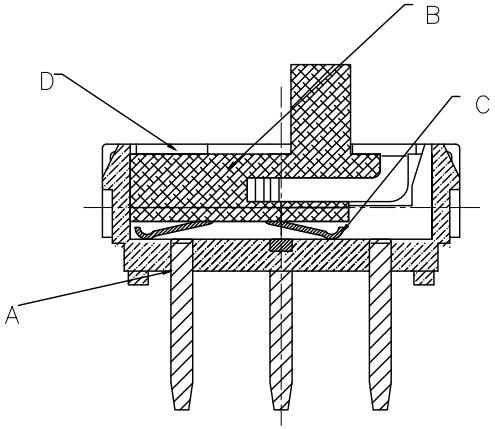

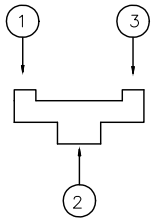

SCHEMATIC

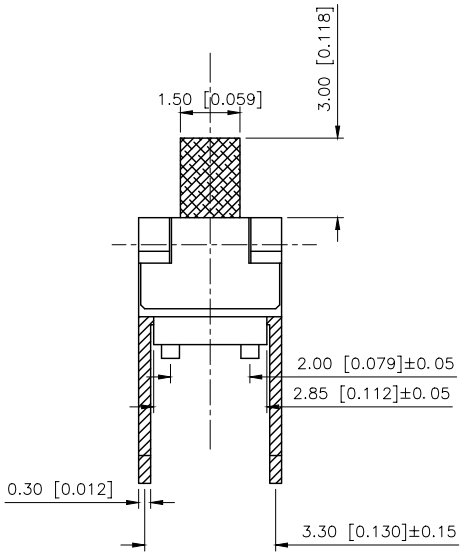

NOTE:
Rating:DC 12V 50mA
Insulation resistance:100mΩ(DC100V)
Withstanding voltage:AC100V/minute
Operating temperature:−10℃~+60℃
Force:200gf±100gf
Lifetime:10000 Cycles

PAPT NO	L
SS-3235D-01-L1	2.0
SS-3235D-01-L2	3.0
SS-3235D-01-L3	4.0
SS-3235D-01-L4	5.0

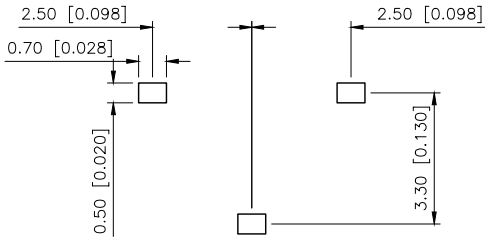

PCB LAYOUT

ITEM	PAPT NAME	QTY	MATERIAL	FINISHING
4	Lid	1	SUS	Silvery white
3	Contact spring	2	Phosphor Bronze	Silvery white
2	Keystake	1	PPA	Black
1	Base	1	PPA Brass	Black Silver plating

AuGLAR	±5°
X.	±0.40
X.x	±0.30
X.xx	±0.20
X.xxx	±0.15
UNSPECIFIED TOLERAuCES	

XKB Connection 星坤

DESIGN	阿树	VIEW:	MODEL TYPE: SLIDE SWITCH
CHECKED		UNIT: mm/in	PART NO.: SS-3235D-01-L1
APPROVED		SIZE: A4	DWG NO.: X-SS-3235D-01-L1

XKB INDUSTRIAL PRECISION CO.,LIMITED

SCALE	PAGE	REVISION
N/A	1/1	A1