| REVISIONS | | | | | |
|---|---|---|---|---|---|
| REV. | ECN NO. | LOCATION | DESCRIPTION | DATE | DESIGN |
| A0 | N/A | | INITIAL RELEASE | / | / |
| A1 | N/A | | 图面升级整理图面 | 2025.05.17 | 阿树 |

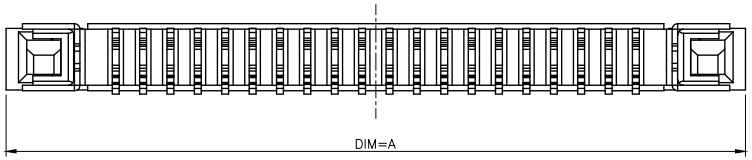


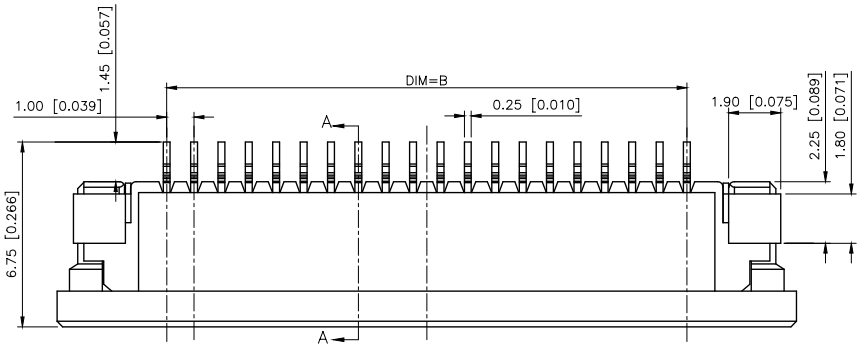


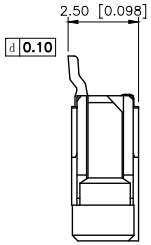


PART NO.:

X10B25 U 22 T
① ② ③ ④

①Series Name:X10B25=1.00mm Pitch(H:2.50mm)
②Assembly style : L:Low Contact SMT Type
U:Upper Contact SMT Type
D:Double-Face Contact SMT Type
H:Back-flip Double-Face Contact SMT Type
③Number of terminals :XX=04-40PIN

④Plating : G:Gold Flash Over Nickel
T:Tin Over Nickel

3.PERFORMANCE
3.1: CURRENT RATING:0.5A/PIN
3.2: VOLTAGE RATING:50V (AC/DC)
3.3:CONTACT RESISTANCE:INITAL VALUE 30mOHM MAX.
3.4:INSULATON RESISTANCE:500MOHM in.
3.5:DIELECTRIC WITHSTANDING VOLTAGE:250V AC FOR 1MINUTE
3.6: DURABILITY: 20 TIMES Min.
3.7:OPERATING TEMPERATURE:-40℃+85℃
OPERUTING HUMIDITY RANGE: 20% TO 85%

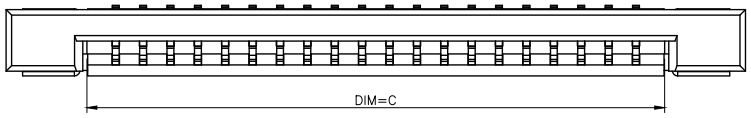


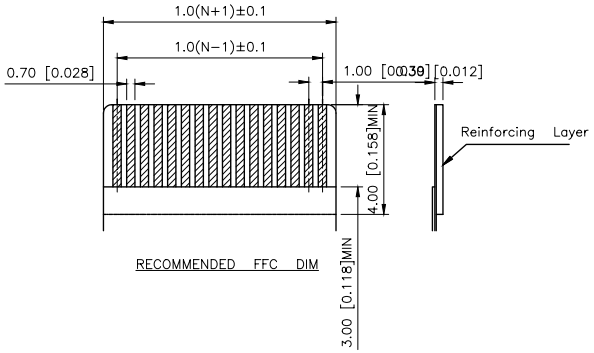


RECOMMENDED FFC DIM

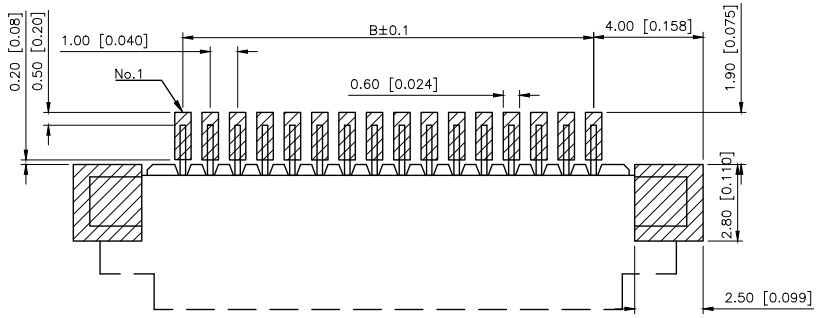


RECOMMENDED PCB LAYOUT

| No. of Contacts | DIMENSIONS | | | No. of Contacts | | | |
|---|---|---|---|---|---|---|---|
| | DIM A | DIM B | DIMC | | DIM A | DIM B | DIMC |
| 4 | 11.00 | 3.00 | 5.10 | 23 | 30.00 | 22.00 | 24.10 |
| 5 | 12.00 | 4.00 | 6.10 | 24 | 31.00 | 23.00 | 25.10 |
| 6 | 13.00 | 5.00 | 7.10 | 25 | 32.00 | 24.00 | 26.10 |
| 7 | 14.00 | 6.00 | 8.10 | 26 | 33.00 | 25.00 | 27.10 |
| 8 | 15.00 | 7.00 | 9.10 | 27 | 34.00 | 26.00 | 28.10 |
| 9 | 16.00 | 8.00 | 10.10 | 28 | 35.00 | 27.00 | 29.10 |
| 10 | 17.00 | 9.00 | 11.10 | 29 | 36.00 | 28.00 | 30.10 |
| 11 | 18.00 | 10.00 | 12.10 | 30 | 37.00 | 29.00 | 31.10 |
| 12 | 19.00 | 11.00 | 13.10 | 31 | 38.00 | 30.00 | 32.10 |
| 13 | 20.00 | 12.00 | 14.10 | 32 | 39.00 | 31.00 | 33.10 |
| 14 | 21.00 | 13.00 | 15.10 | 33 | 40.00 | 32.00 | 34.10 |
| 15 | 22.00 | 14.00 | 16.10 | 34 | 41.00 | 33.00 | 35.10 |
| 16 | 23.00 | 15.00 | 17.10 | 35 | 42.00 | 34.00 | 36.10 |
| 17 | 24.00 | 16.00 | 18.10 | 36 | 43.00 | 35.00 | 37.10 |
| 18 | 25.00 | 17.00 | 19.10 | 37 | 44.00 | 36.00 | 38.10 |
| 19 | 26.00 | 18.00 | 20.10 | 38 | 45.00 | 37.00 | 39.10 |
| 20 | 27.00 | 19.00 | 21.10 | 39 | 46.00 | 38.00 | 40.10 |
| 21 | 28.00 | 20.00 | 22.10 | 40 | 47.00 | 39.00 | 41.10 |
| 22 | 29.00 | 21.00 | 23.10 | | | | |

| | |
|---|---|
| AuGLAR | ±5° |
| X. | ±0.40 |
| X.x | ±0.30 |
| X.xx | ±0.20 |
| X.xxx | ±0.15 |
| UNSPECIFIED TOLERAuCES | |

XKB Connection 星创

| | | | |
|---|---|---|---|
| DESIGN | 阿树 | VIEW: | MODEL TYPE: FPC CONNECTOR |
| CHECKED | | UNIT: mm/in | PART NO.: X10B25U22T |
| APPROVED | | SIZE: A4 | DWG NO.: X10B25U22T |

XKB INDUSTRIAL PRECISION CO.,LIMITED

| SCALE | PAGE | REVISION |
|---|---|---|
| N/A | 1/1 | A1 |

www.helloxkb.com www.helloxkb.cn www.xk-dg.cn