REVISIONS					
REV.	ECN NO.	LOCATION	DESCRIPTION	DATE	DESIGN
A0	N/A		INITIAL RELEASE	/	/
A1	N/A		图面升级整理图面	2025.06.06	阿树

Code-x	H
A	1.50
B	1.60
C	1.70
D	2.00
E	2.50
F	3.00
G	3.50
H	4.00
I	4.30
J	4.50
K	5.00

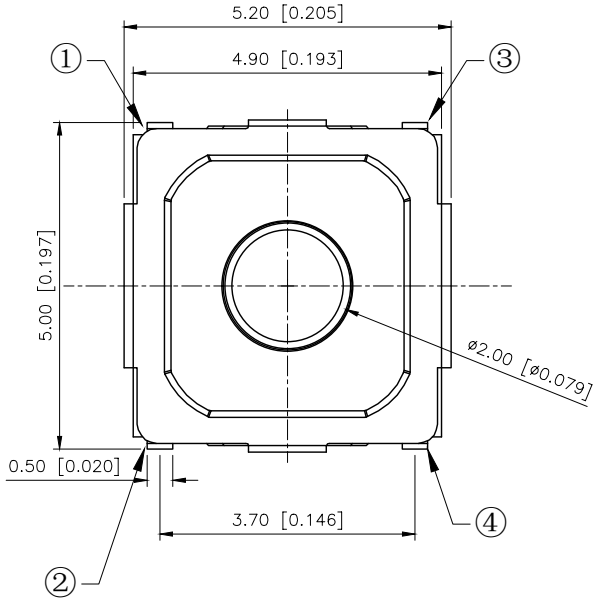

SPECIFICATION
Contact Rating: 50mA,12V DC
Contact Resistance: 100mΩ max
Insulation Resistance: 100MΩ min.500V DC
Dielectric Strength: 250V AC/1minute
Travel: 0.25mm
Operating Temp: -30℃~+85℃
Storage Temp: -30℃~+80℃

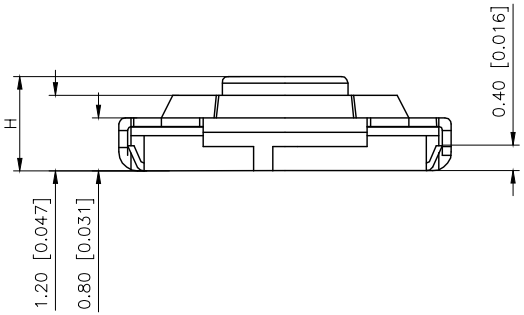

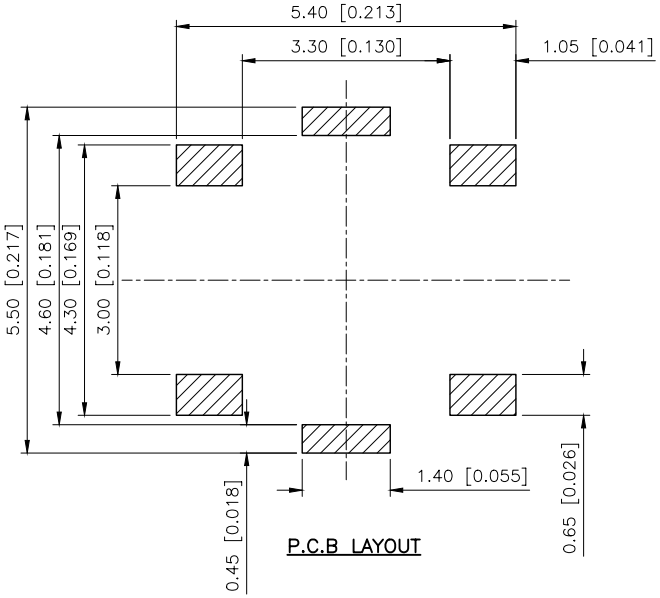

P.C.B LAYOUT

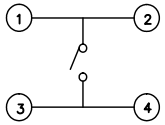

CIRCUIT DIAGRAM

PAPT NO	TS-1187E-B-A-B
Operating Force	A:100gf B:160gf C:260gf
Height	Code-x
Keystake	A:PA46 B:Brass

ITEM	PAPT NAME	QTY	MATERIAL	FINISHING
⑤	Terminal	4	Brass（0.30t）	Plating silvering
④	Contact	1	F.ag/SUS	Natural
③	Base	1	Lcp	
②	Cover	1	Brass	Plating Nickel
①	Keystake	1	Brass	

AuGLAR	±5°
X.	±0.40
X.x	±0.30
X.xx	±0.20
X.xxx	±0.15
UNSPECIFIED TOLERAuCES	

XKB Connection

DESIGN	阿树	VIEW:	MODEL TYPE: TACT SWITCH
CHECKED		UNIT: mm/in	PART NO.: TS-1187E-B-A-B
APPROVED		SIZE: A4	DWG NO.: TS-1187E-B-A-B

XKB INDUSTRIAL PRECISION CO.,LIMITED

SCALE	PAGE	REVISION
N/A	1/1	A1

www.helloxkb.com www.helloxkb.cn www.xk-dg.cn