| REVISIONS | | | | | |
|---|---|---|---|---|---|
| REV. | ECN NO. | LOCATION | DESCRIPTION | DATE | DESIGN |
| A0 | N/A | | INITIAL RELEASE | / | / |
| A1 | N/A | | 图面升级整理图面 | 2024.11.28 | 阿树 |

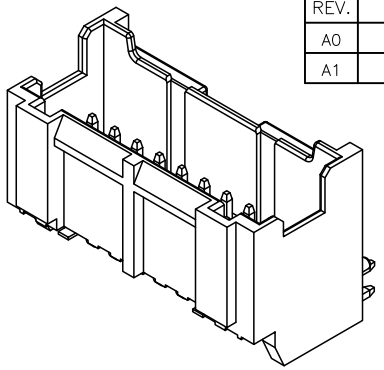

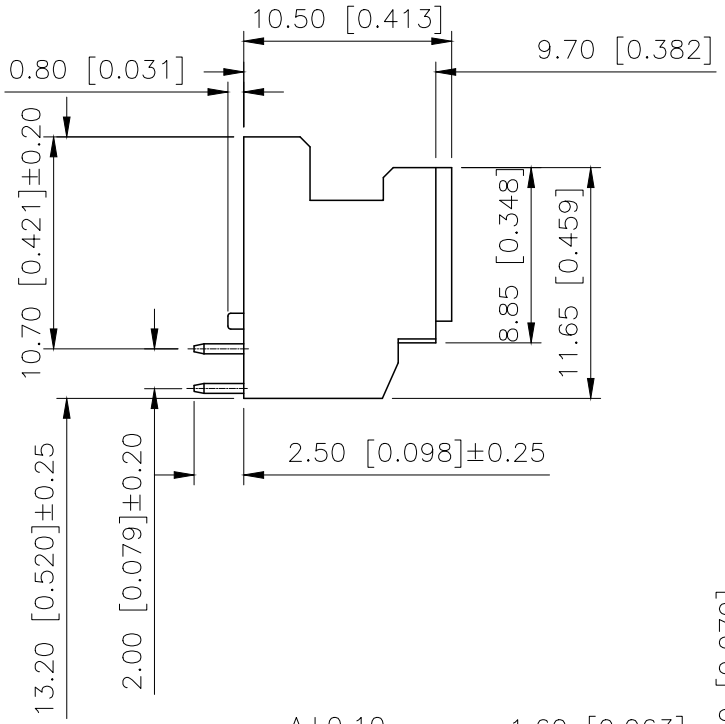


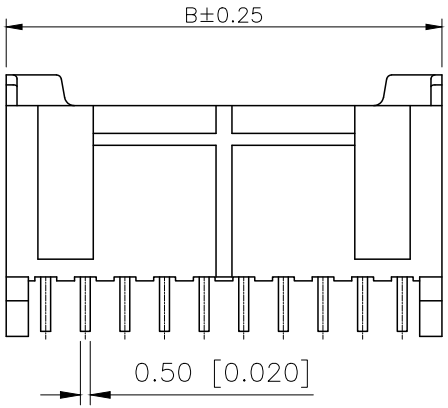


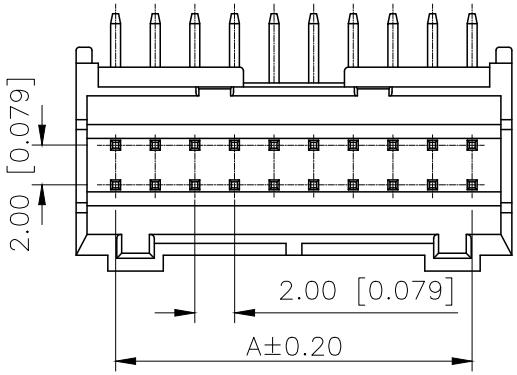


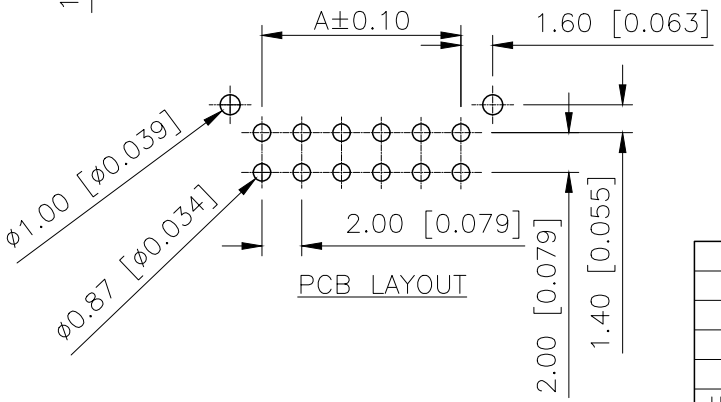


PCB LAYOUT

Specifications:
Voltage rating:250V AC/DC
额定电压：250V AC/DC
Current rating:3A AC/DC
额定电流：3A AC/DC
Withstanding voltage:800V AC/minute
耐受电压：800V AC/分钟
Temperature range:−40℃−+125℃
温度范围：−40℃−+125℃
Insulation resistance:1000MΩ min
绝缘电阻：1000MΩ Min
Contact resistance:20mΩ Max
接触电阻：20mΩ Max

PART NO.:

X2015 W R−2x14−N0 SN
① ② ③ ④ ⑤ ⑥

①Series No
②Category:W−Wafer
③Welding Board Angle:R−Stright 90°
④Row No−Pin No:2xXX−2x02~2x20Pin
⑤Material:N0−Nylon66 94V−0
⑥Plating Category:SN−Tin Plating

| Poles | Dimensions(mm) | | Poles | Dimensions(mm) | |
|---|---|---|---|---|---|
| | A | B | | A | B |
| 2x02 | 2.00 | 6.00 | 2x08 | 14.00 | 18.00 |
| 2x03 | 4.00 | 8.00 | 2x09 | 16.00 | 20.00 |
| 2x04 | 6.00 | 10.00 | 2x10 | 18.00 | 22.00 |
| 2x05 | 8.00 | 12.00 | 2x11 | 20.00 | 24.00 |
| 2x06 | 10.00 | 14.00 | 2x12 | 22.00 | 26.00 |
| 2x07 | 12.00 | 16.00 | 2x20 | 38.00 | 42.00 |

| X2015WR−2x14−N0SN | Nylon66 | Brass | X2015H |
|---|---|---|---|
| PART N0 | Material | Material(Pin) | Suitable XKB Housing |

| AuGLAR | ±5° |
|---|---|
| X. | ±0.40 |
| X.x | ±0.30 |
| X.xx | ±0.20 |
| X.xxx | ±0.15 |
| UNSPECIFIED TOLERAuCES | |

XKB Connection 星创

| DESIGN | 阿树 | VIEW: | MODEL TYPE: 2.00mm Crimp Style Connectors |
|---|---|---|---|
| CHECKED | | UNIT: mm/in | PART NO.: X2015WR−2x14−N0SN |
| APPROVED | | SIZE: A4 | DWG NO.: |

XKB INDUSTRIAL PRECISION CO.,LIMITED

| SCALE | PAGE | REVISION |
|---|---|---|
| N/A | 1/1 | A1 |