REVISIONS					
REV.	ECN NO.	LOCATION	DESCRIPTION	DATE	DESIGN
A0	N/A		INITIAL RELEASE	/	/
A1	N/A		图面升级整理图面	2025.2.12	阿树

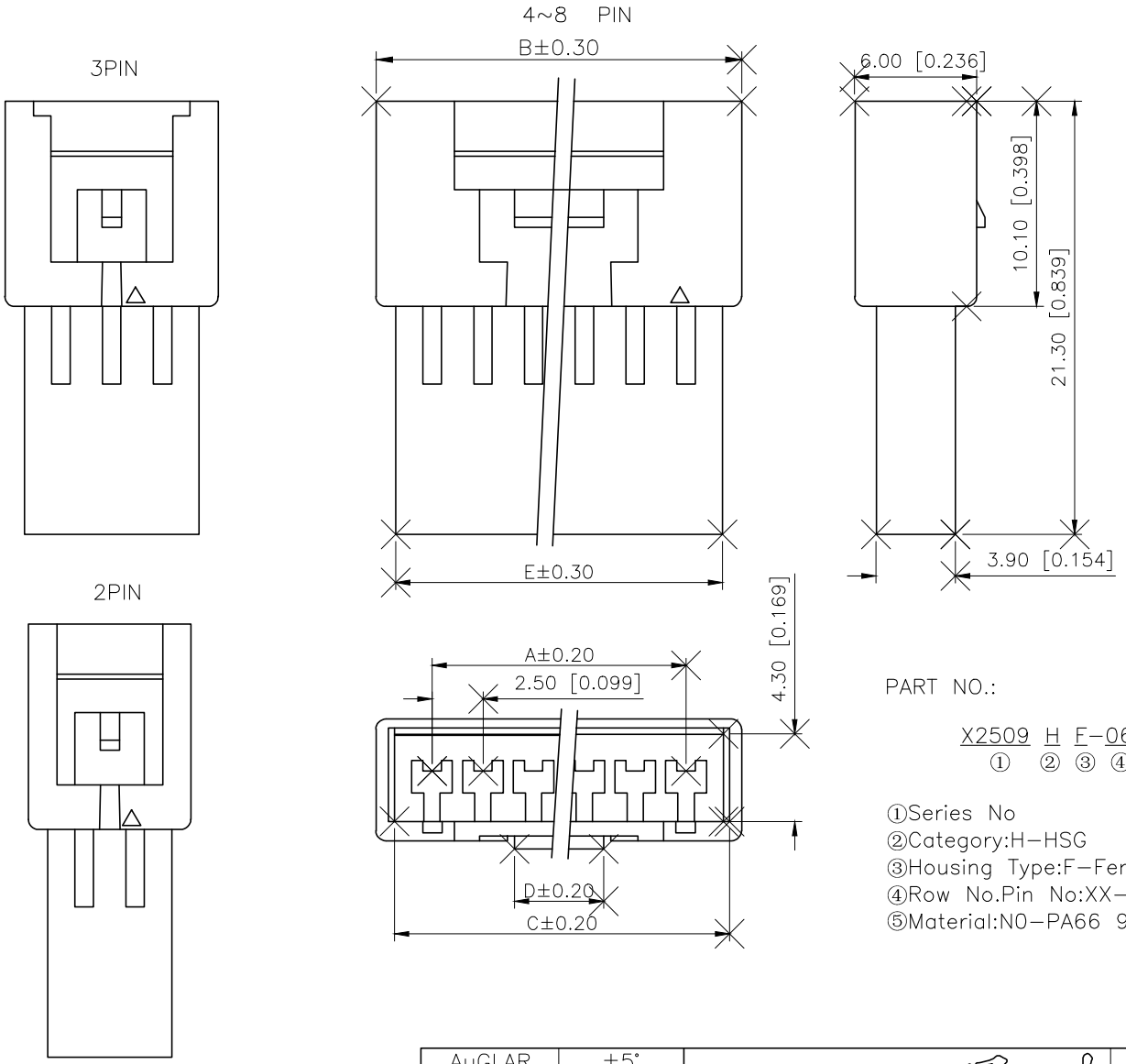

Specifications:
规格：
Voltage rating:250V AC/DC
额定电压：250V AC/DC
Current rating:3A AC/DC
额定电流：3A AC/DC
Withstanding voltage:1000V AC/minute
耐受电压：1000V AC/分钟
Temperature range:−40℃−+125℃
温度范围：−40℃−+125℃
Insulation resistance:1000MΩ min
绝缘电阻：1000MΩ min
Contact resistance:20mΩ max
接触电阻：20mΩ max

PART NO.:

X2509 H F−06−N0
① ② ③ ④ ⑤

①Series No
②Category:H−HSG
③Housing Type:F−Female Housing
④Row No.Pin No:XX−02P~08P
⑤Material:N0−PA66 94V−0

poles	Dimensions(mm)			
	A	B	C/E	D
02	2.50	8.00	6.10	0.95
03	5.00	10.50	8.60	0.95
04	7.50	13.00	11.10	1.90
05	10.00	15.50	13.60	1.90
06	12.50	18.00	16.10	4.40
07	15.00	20.50	18.60	4.40
08	17.50	23.00	21.10	4.40

X2509HF−06−N0	PA66 UL 94V−0	X2509TM	X2509W
PART N0	Material	Suitable XKB Terminal	Suitable XKB Wafer

AuGLAR	±5°
X.	±0.40
X.x	±0.30
X.xx	±0.20
X.xxx	±0.15
UNSPECIFIED TOLERAuCES	

XKB 星创 Connection

DESIGN	阿树	VIEW:	MODEL TYPE: 2.50mm Crimp Style Connector
CHECKED		UNIT: mm/in	PART NO.: X2509HF−06−N0
APPROVED		SIZE: A4	DWG NO.: X−X2509HF−06−N0

XKB INDUSTRIAL PRECISION CO.,LIMITED

SCALE	PAGE	REVISION
N/A	1/1	A1

www.helloxkb.com www.helloxkb.cn www.xk−dg.cn