	REVISIONS				
REV.	ECN NO.	LOCATION	DESCRIPTION	DATE	DESIGN
A0	N/A		INITIAL RELEASE	/	/
A1	N/A		图面升级整理图面	2025.11.08	阿树

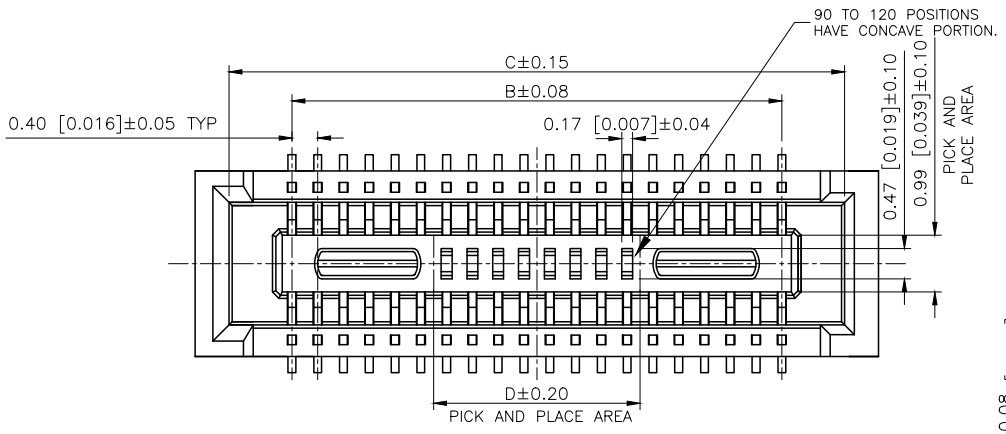

SPECIFICATIONS:
1.VOLTAGE/CURRENT RATING: 30V/AC, DC.0.3A:
2.WITHSTANDING VOLTAGE: 100V AC/ONE MINUTE;
3.INSULATION RESISTANCE: 50MΩ MIN/100V DC.;
4.CONTACT RESISTANCE: 90mΩ MAX./1mA,20mV AC,1KHz;
5.DURABILITY: 30 CYCLES;
6.OPERATING TEMPERATURE RANGE: −40°C TO 125°C
MATERIAL:
1.INSULATOR: LCP UL 94V−0 BLACK;
2.TERMINAL: PHOSPHOR BRONZE;
PLATING:
1.TERMINAL: CONTACT AREA: GOLD 0.05 um"MIN.
SMT LEAD: GOLD 0.025 um" MIN.
UNDERPLATING: NICKEL 1 um" MIN.

PART NO.:

X0408 F V S−20 A−LP V01
① ② ③ ④ ⑤ ⑥ ⑦ ⑧

①Series No
②Category:F−Female
③Welding Board Angle:V−Stright 180°
④Welding Way: S−SMT
⑤Row No.Pin No:XX−10~100P
⑥Height:A=1.5
⑦Material:LP−LCP UL 94V−0 Black
⑧Plating:V01−Gold Flash;

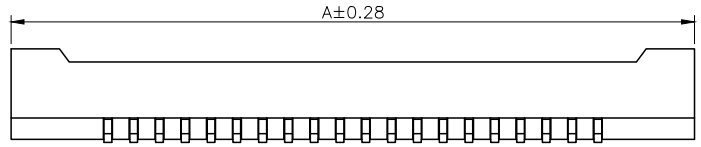

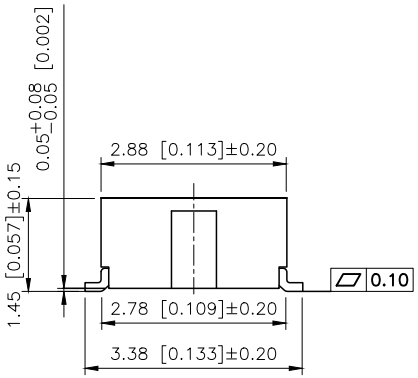

HEIGHT		
H(Socket)	H(Plug)	Mating height
1.45	1.14	A=1.5

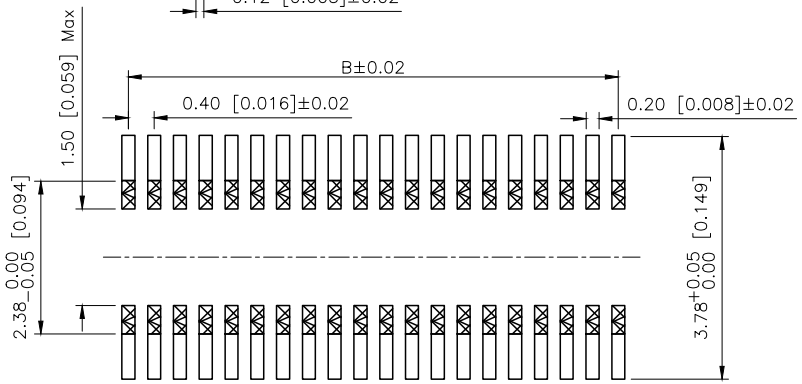

Recommended PCB Layout

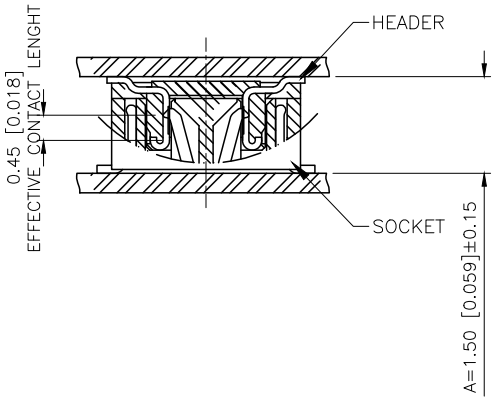

Poles	Dimensions(mm)			
	A	B	C	D
10	4.60	1.60	3.55	1.00
12	5.00	2.00	3.95	
20	6.60	3.60	5.55	
24	7.40	4.40	6.35	1.20
30	8.60	5.60	7.55	1.50
34	9.40	6.40	8.35	2.30
40	10.60	7.60	9.55	3.20
50	12.60	9.60	11.55	
60	14.60	11.60	13.55	
70	16.60	13.60	15.55	
80	18.60	15.60	17.55	
90	20.60	17.60	19.55	
100	22.60	19.60	21.55	

X0408FVS−20A−LPV01	LCP	Phosphor Bronze	X0407W
PART NO	Material	Material(Pin)	Suitable XKB Wafer

AuGLAR	±5°
X.	±0.40
X.x	±0.30
X.xx	±0.20
X.xxx	±0.15
UNSPECIFIED TOLERAuCES	

XKB Connection 星创

DESIGN	阿树	VIEW:	MODEL TYPE: 0.4mm BTB Connector
CHECKED		UNIT: mm/in	PART NO.: X0408FVS−20A−LPV01
APPROVED		SIZE: A4	DWG NO.:

XKB INDUSTRIAL PRECISION CO.,LIMITED

SCALE	PAGE	REVISION
N/A	1/2	A1