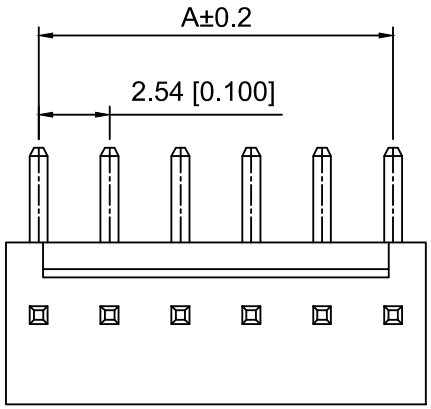

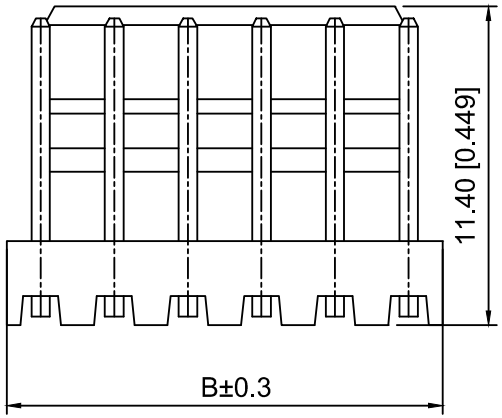

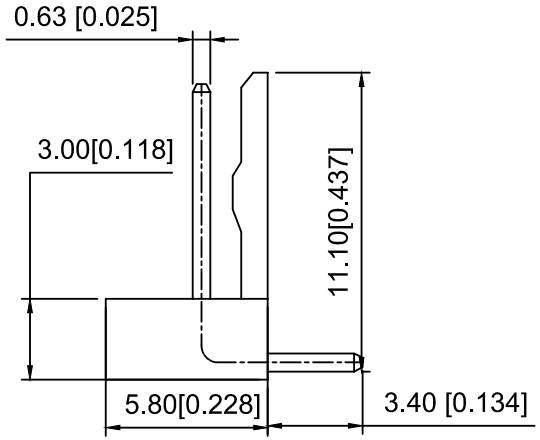

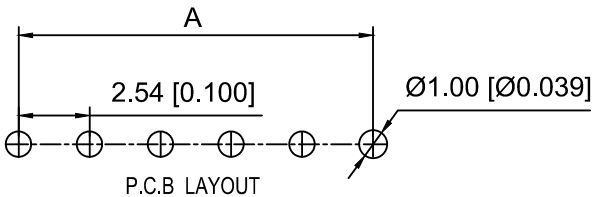

P.C.B LAYOUT

Specifications:
规格：
Voltage rating:250V AC/DC
额定电压：250V AC/DC
Current rating:3A AC/DC
额定电流：3A AC/DC
Withstanding voltage:1000V AC/minute
耐受电压：1000V AC/分钟
Temperature range:-25℃-+85℃
温度范围：-25℃-+85℃
Insulation resistance：≤10mΩ min
绝缘电阻：≤10mΩ min
Contact resistance:20mΩ Max
接触电阻：20mΩ Max

X2510	W	R	-05	A	-N0	SN
①	②	③	④	⑤	⑥	⑦

1.Series No
2.Category:W-Wafer
3.Welding Board Angle:R- 90°
4..Row No-Pin No:XX-02P~20P
5.TYPE:B
6.Material:N0-PA99 94V-0
7.Plating Category:SN-Bright Tin Plating

poles	Dimensions/mm	
	A	B
02	2.54	5.08
03	5.08	7.62
04	7.62	10.16
05	10.16	12.70
06	12.70	15.24
07	15.24	17.78
08	17.78	20.32
09	20.32	22.86
10	22.86	25.40
11	25.40	27.94
12	27.94	30.48
13	30.48	33.02
14	33.02	35.56
15	35.56	38.10

X2510WR-05A-N0SN	N0-Nylon66	Brass	Tin-Plated	X2510H
PART N0	Material	Material(Pin)	Finish(Pin)	Suitable XKB Housing

MARK	DESCRIPTION	DATE	REVISED	APPROVED
ΔX				
ΔX				
ΔX				

REVISIONS

UNSPECIFIED TOLERANCES	
ANGLAR	±5°
L≤ 4	±0.2
4<L≤ 16	±0.3
16<L≤ 63	±0.4
L> 63	±0.5

www.helloxkb.com www.helloxkb.cn www.xk-dg.cn

XKB INDUSTRIAL PRECISION CO.,LIMITED

DSND		SCALE: N/A	MODEL TYPE: 2.54mm Crimp Style Connector
DWN		VIEW:	PART NO.: X2510WR-05A-N0SN
CHKD		UNIT: mm/in	DWG NO.: X2510WR-05A-N0SN
APPD		SIZE: A4	

WEIGHT	SHEET	REVISION
	1/1	A0