REVISIONS					
REV.	ECN NO.	LOCATION	DESCRIPTION	DATE	DESIGN
A0	N/A		INITIAL RELEASE	/	/
A1	N/A		图面升级整理图面	2025.05.26	阿树

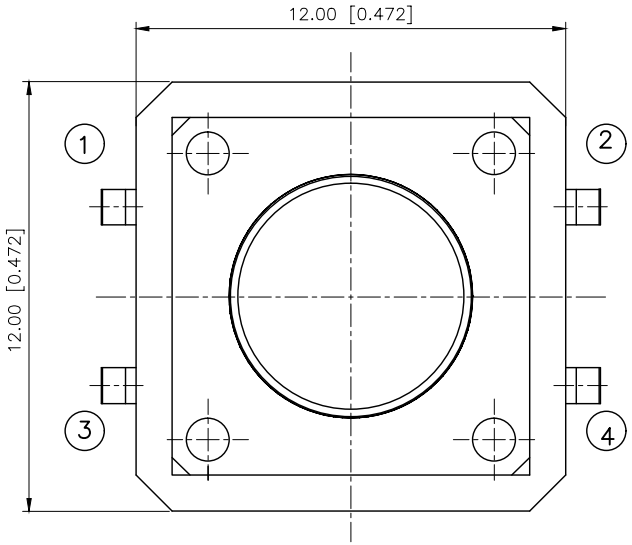

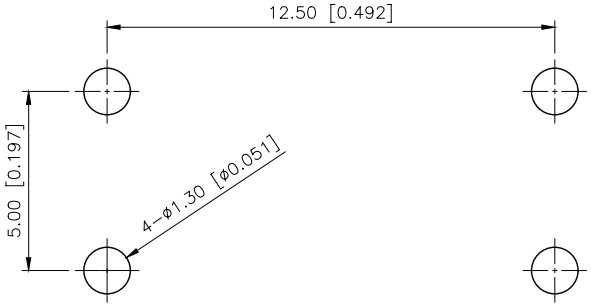

P.C.B Mounting pattern Dimension

Code-x	H	Code-x	H
A	4.30	O	11.00
B	4.50	P	11.50
C	5.00	Q	12.00
D	5.50	R	12.50
E	6.00	S	13.00
F	6.50	T	13.50
G	7.00	U	14.00
H	7.50	V	15.00
I	8.00	W	16.00
J	8.50	X	17.00
K	9.00	Y	18.00
L	9.50	Z	19.00
M	10.00		
N	10.50		

SPECIFICATION
Contact Rating: 50mA,12V DC
Contact Resistance: 100mΩ max
Insulation Resistance: 100MΩ min.500V DC
Dielectric Strength: 250V AC/1minute
Travel: 0.25mm
Operating Temp: -30℃~+85℃
Storage Temp: -30℃~+80℃

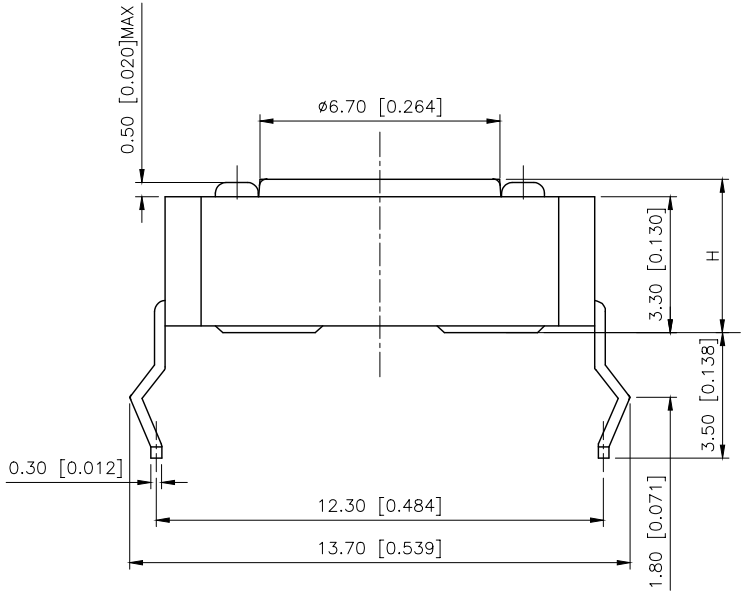

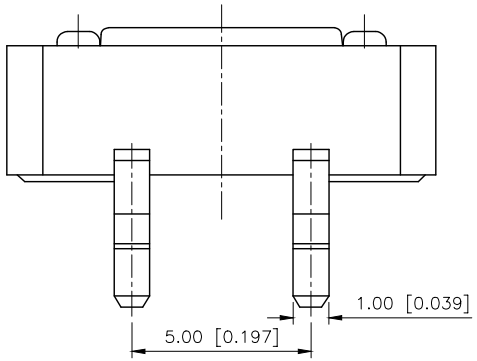

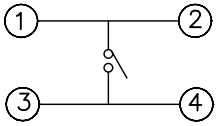

CIRCUIT DIAGRAM

PAPT NO	TC-1103-B-O	
Operating Force	B:160gf	C:260gf
Height	Code-x	

ITEM	PAPT NAMF	QTY	MATERIAL	FINISHING
⑤	Terminal	4	Brass (0.30t)	Plating silvering
④	Contact	1	F.ag/SUS	Natural
③	Base	1	PA46	
②	Cover	1	Spcc	Plating Nickel
①	Keystake	1	PA46	

AuGLAR	±5°
X.	±0.40
X.x	±0.30
X.xx	±0.20
X.xxx	±0.15
UNSPECIFIED TOLERAuCES	

XKB Connection 星坤

DESIGN	阿树	VIEW:	MODEL TYPE: TACT SWITCH
CHECKED		UNIT: mm/in	PART NO.: TC-1103-B-O
APPROVED		SIZE: A4	DWG NO.: TC-1103-B-O

XKB INDUSTRIAL PRECISION CO.,LIMITED

SCALE	PAGE	REVISION
N/A	1/1	A1

www.helloxkb.com www.helloxkb.cn www.xk-dg.cn