REVISIONS					
REV.	ECN NO.	LOCATION	DESCRIPTION	DATE	DESIGN
A2	ECN-P-202406005		新开模具，尺寸参照修正	2024.06.21	桑甚
A3	ECN-P-2026041401		产品外观变更	2026.04.14	山楂

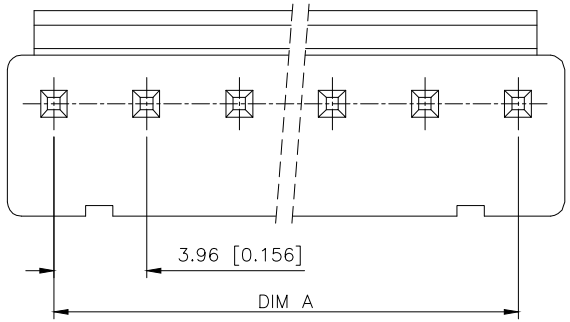

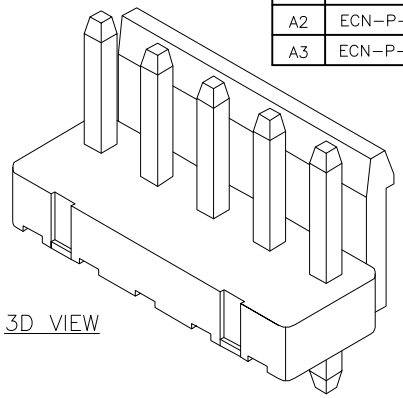

Specifications(规格)：
1.Voltage rating(额定电压):250V AC DC
2.Current rating(额定电流):7.0A AC/DC
3.Withstanding voltage(耐压值):≥1500V AC/minute
4.Insulation resistance(绝缘电阻):1000MΩ Min
5.Contact resistance(绝缘电阻):10mΩ Max
6.Temperature range(使用温度):-40℃~+105℃
Material(材质)：
1.Pin material：Brass
2.Finished：Tin 60u"
3.Housing material：PA46，UL94V-0
4.Housing color：Primary color

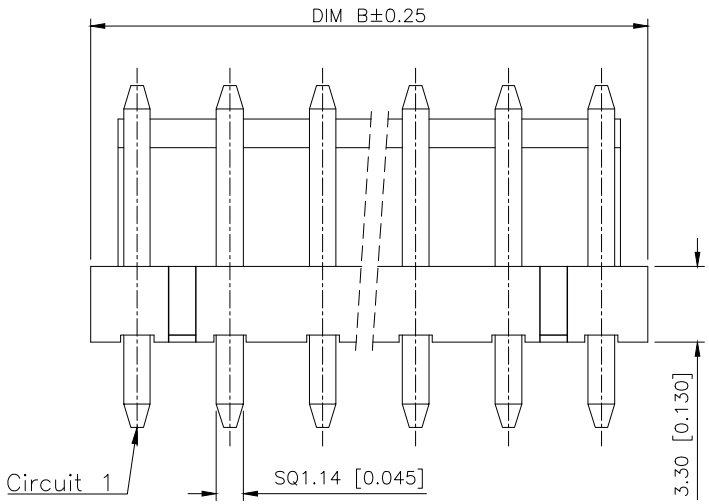

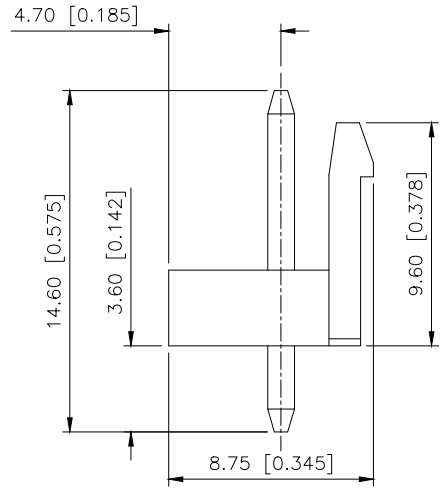

PART NO.:

X9396 W V-04-46 SN
① ② ③ ④ ⑤ ⑥

①Series No
②Category:W-Wafer
③Welding Board Angle:V-Stright 180°
④Row No.Pin No:XX-02~15Pin
⑤Material:46-PA46 UL94V-0
⑥Planting: V01-Gold 1u"
SN-Bright tin plating

Poles	DIM.A	DIM.B
02	3.96	7.92
03	7.92	11.88
04	11.88	15.84
05	15.84	19.80
06	19.80	23.76
07	23.76	27.72
08	27.72	31.68
09	31.68	35.64
10	35.64	39.60
11	39.60	43.56
12	43.56	47.52
13	47.52	51.48
14	51.48	55.44
15	55.44	59.40

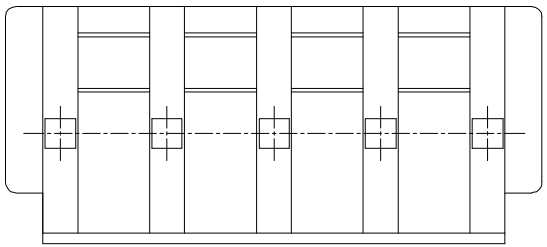

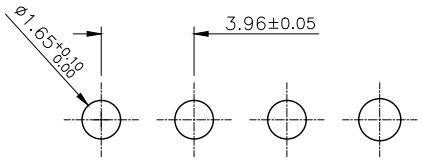

PCB LAYOUT

X9396WV-04-46SN	PA46 UL 94V-0	BRASS	Tin PLATED	X9396H
PART NO.	MATERIAL	MATERIAL(PIN)	FINISH(PIN)	Suitable XKB Terminal

AuGLAR	±5°
X.	±0.40
X.x	±0.30
X.xx	±0.20
X.xxx	±0.15
UNSPECIFIED TOLERAuCES	

XKB 星创 Connection

DESIGN	山楂	VIEW:	MODEL TYPE: 3.96mm Crimp Style Connector
CHECKED		UNIT: mm/in	PART NO.: X9396WV-04-46SN
APPROVED		SIZE: A4	DWG NO.:

XKB INDUSTRIAL PRECISION CO.,LIMITED

SCALE	PAGE	REVISION
N/A	1/1	A3