| REVISIONS | | | | | |
|---|---|---|---|---|---|
| REV. | ECN NO. | LOCATION | DESCRIPTION | DATE | DESIGN |
| A1 | N/A | | | 2024.12.9 | |
| A2 | ECN-P-2026031701 | A2 X2 | | 2026.03.16 | |

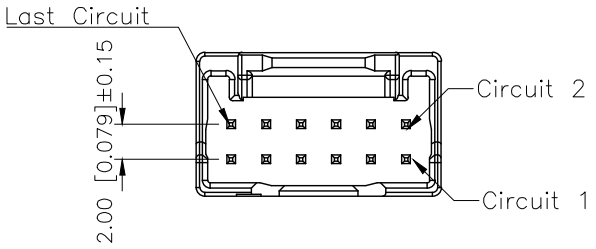


Specifications( )
1.Voltage rating( ):DC 250V
2.Current rating( ):3A AC/DC
3.Withstanding voltage( ):≥800V AC/minute A2
4.Insulation resistance( ):≥1000MΩ Min
5.Contact resistance( ):≤20mΩ Max
6.Temperature range( ):-40 ~+125

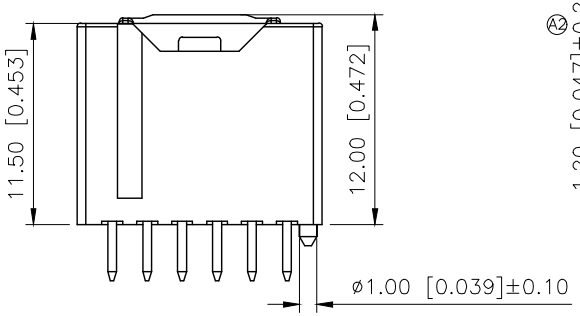


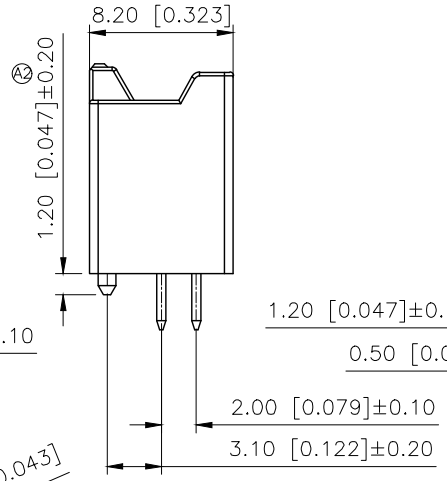


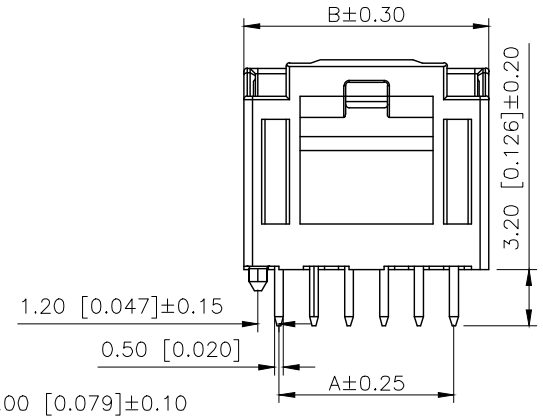


PART NO.:

X2081 W V-2x18-N0 SN

Series No
Category:W-Wafer
Welding Board Angle:V-Stright 180°
Row No.Pin No:2xXX-2X05~2x20P
Material:N0-PA66 UL94V-0
Plating:SN-Bright Tin Plated

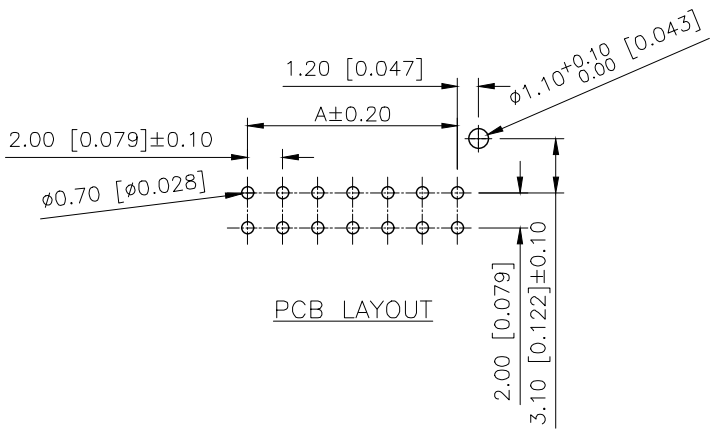


PCB LAYOUT

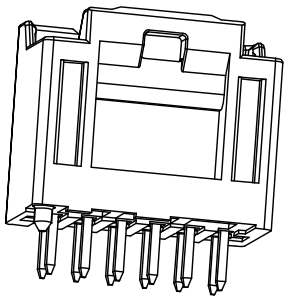

| Poles | Dimensions(mm) | | Poles | Dimensions(mm) | |
|---|---|---|---|---|---|
| | A | B | | A | B |
| 2x05 | 8.00 | 12.00 | 2x13 | 24.00 | 30.00 |
| 2x06 | 10.00 | 14.00 | 2x14 | 26.00 | 32.00 |
| 2x07 | 12.00 | 16.00 | 2x15 | 28.00 | 34.00 |
| 2x08 | 14.00 | 18.00 | 2x16 | 30.00 | 36.00 |
| 2x09 | 16.00 | 20.00 | 2x17 | 32.00 | 38.00 |
| 2x10 | 18.00 | 22.00 | 2x18 | 34.00 | 40.00 |
| 2x11 | 20.00 | 24.00 | 2x19 | 36.00 | 42.00 |
| 2x12 | 22.00 | 26.00 | 2x20 | 38.00 | 44.00 |

| X2081WV-2x18-N0SN | PA66 | Brass | X2081H |
|---|---|---|---|
| PART N0 | Material | Material(Pin) | Suitable XKB Housing |

| AuGLAR | ±5° |
|---|---|
| X. | ±0.40 |
| X.x | ±0.30 |
| X.xx | ±0.20 |
| X.xxx | ±0.15 |
| UNSPECIFIED TOLERAuCES | |

XKB Connection 星创

| | | | |
|---|---|---|---|
| DESIGN | | VIEW: | MODEL TYPE: 2.0mm Crimp Style Connector |
| CHECKED | | UNIT: mm/in | PART NO.: X2081WV-2x18-N0SN |
| APPROVED | | SIZE: A4 | DWG NO.: |

XKB INDUSTRIAL PRECISION CO.,LIMITED

| SCALE | PAGE | REVISION |
|---|---|---|
| N/A | 1/1 | A2 |