REVISIONS					
REV.	ECN NO.	LOCATION	DESCRIPTION	DATE	DESIGN
A0	N/A		INITIAL RELEASE	/	/
A1	N/A		图面升级整理图面	2025.03.05	阿树

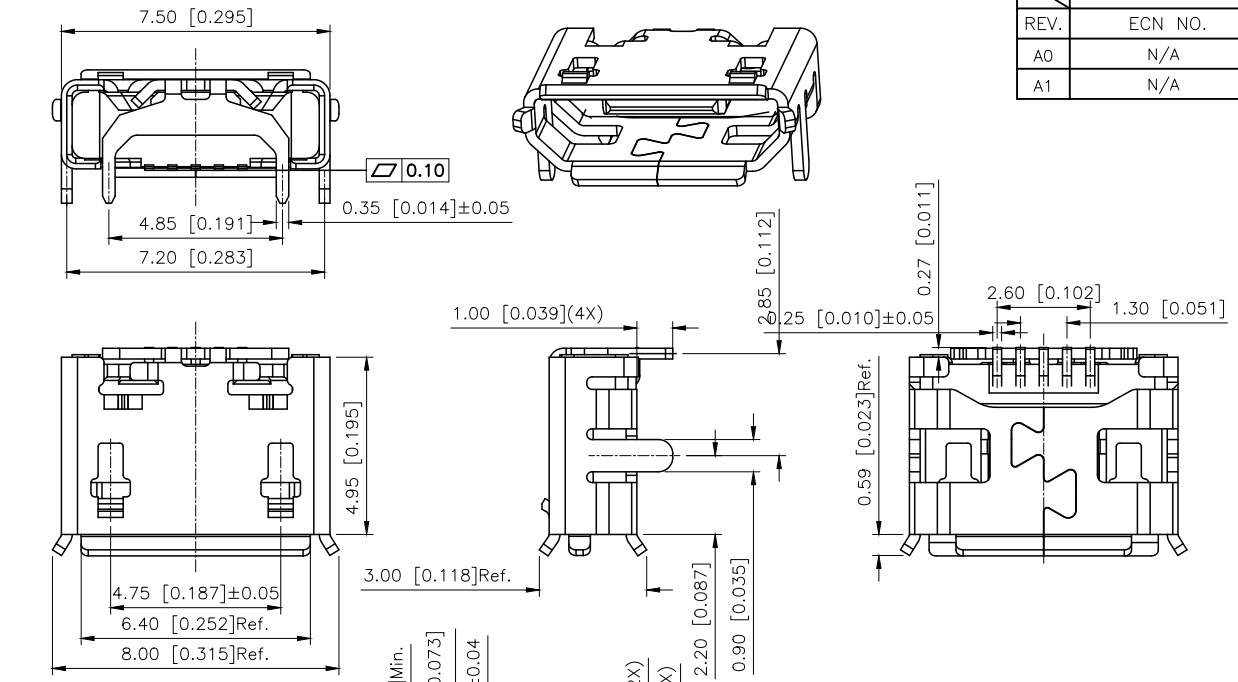

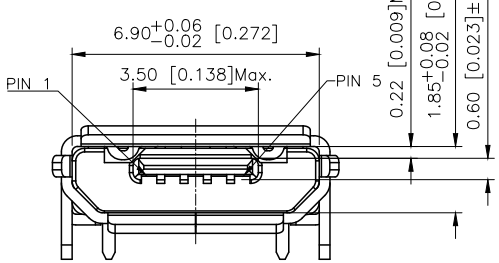

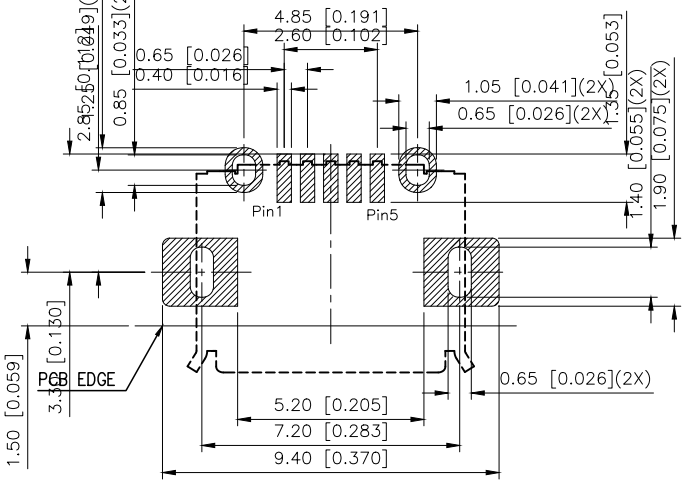

RECOMMENDED PCB LAYOUT(TOP VIEW)
DEFAULT TOLERANCE:±0.05

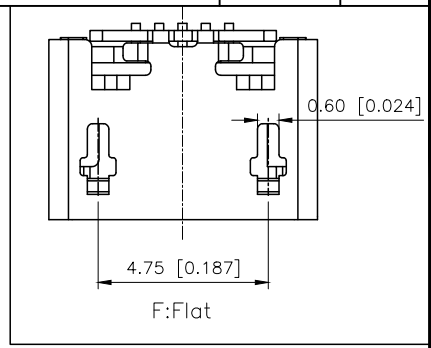

U254−056T−4BH23−S2S

1:AU 1U"
6:AU 30U"
T:TIN
N:NICKEL
S:Sus
2:WITHOUT
S:Scrolls
F:Flat

MICRO USB PIN ASSIGNMENTS

PIN NUMBER	SIGNAL NAME
Pin1	VBUS
Pin2	D−
Pin3	D+
Pin4	ID
Pin5	GND

NOTE:
1.MATERIAL SPECIFICATION:
1.HOUSING:LCP,UL94 V−0 BLACK.
2.CONTACTS: BRASS(C2680 T=0.15)
3.FRONT SHELL: STAINLESS STEEL(SUS304 T=0.3)
2.PLATING SPECIFICATION:
2−1.CONTACTS:
Ni 50u" MIN. UNDER PLATED OVER ALL.
Au PLATED ON THE FUNCTIONAL AREA OF CONTACT.
(GOLD PLATING THICKNESS FOLLOW THE P/N)
PLATING SPECIFICATIONS OF THE SOLDER AREA FOLLOW THE P/N
2−2.FRONT SHELL:
50u" MIN. NICKEL UNDER PLATING OVER ALL.
3.MECHANICAL PERFORMANCE,
3−1.INSERTION FORCE: 3.5Kgf MAX
3−2.REMOVAL FORCE: 0.8kgf MIN
3−3.DURABILITY: 10000 CYCLES.
4.ELECTRICAL PERFORMANCE,
4−1.CURRENT RATING:
VBUS & GND PINS: 1.8A MAX.
OTHER PINS: 0.5A MAX.
4−2. LLCR:
VBUS & GND PINS AND OTHER PINS: 30mΩ/PIN MAX.
SHIELD: 50mΩ/MAX.
LLCR MAX. CHANGE OF ALL PINS: 10mΩ.
4−3.INSULATION RESISTANCE: 100MΩ MIN
4−4.DIELECTRIC WITHSTAND VOLTAGE,AC 100V FOR 1 MINUTE.
5. ENVIRONMENTAL PERFORMANCE:
OPERATING TEMPERATURE: −25°C~+85°C.
6.IR REFLOW:
THE PEAK TEMPERATURE ON THE BOARD SHALL BE MAINTAINED FOR 10 SECONDS AT 260°C.

AuGLAR	±5°
X.	±0.40
X.x	±0.30
X.xx	±0.20
X.xxx	±0.15
UNSPECIFIED TOLERAuCES	

XKB Connection 星创

DESIGN	阿树	VIEW:	MODEL TYPE: MICRO USB
CHECKED		UNIT: mm/in	PART NO.: U254−056T−4BH23−S2S
APPROVED		SIZE: A4	DWG NO.: X−U254−056T−4BH23−S2S

XKB INDUSTRIAL PRECISION CO.,LIMITED

SCALE	PAGE	REVISION
N/A	1/1	A1

www.helloxkb.com www.helloxkb.cn www.xk−dg.cn