REVISIONS					
REV.	ECN NO.	LOCATION	DESCRIPTION	DATE	DESIGN
A1	N/A			2025.02.13	
A2	ECN-P-2026040701	A2 X2		2026.04.07	

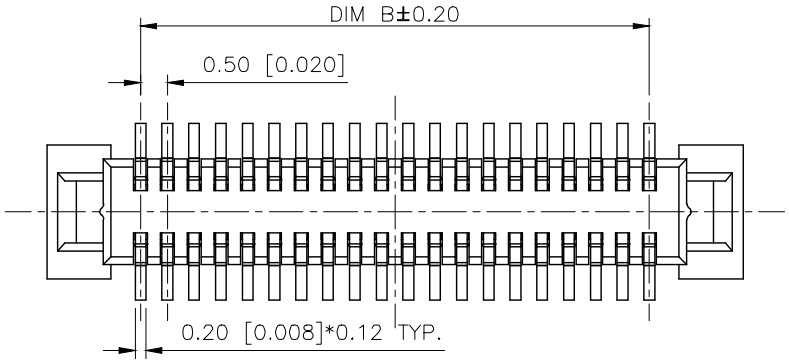

Specifications( )
1.Voltage rating( ):DC 60V
2.Current rating( ):0.5A AC/DC
3.Withstanding voltage( ):≥150V AC/minute
4.Insulation resistance( ):≥1000MΩ Min
5.Contact resistance( ):≤90mΩ Max
6.Temperature range( ):-40 ~+125

PART NO.:

X0511 W V S-10 A S-LP V01

Series No
Category:W-Wafer
Welding Board Angle:V-Stright 180°
Welding Way: S-SMT
Row No.Pin No:XX-10-80P
Height:A=1.25mm;A=1.75mm
Special No:S-With positioning Columm
Blank-Without positioning Columm
Material:LP-LCP UL94V-0
Plating:V01-Gold Flash

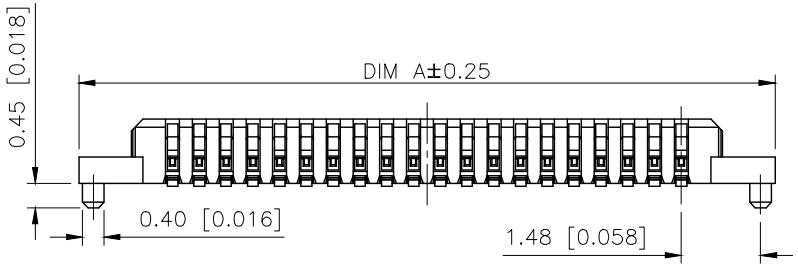

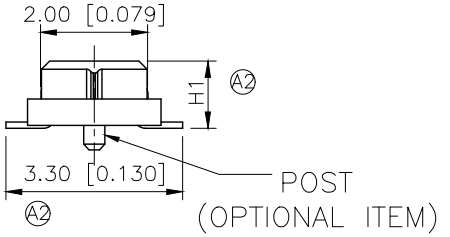

HIGH	PLUG(H1)	SOCKET(H2)
1.50	1.25	1.35
2.00	1.25	1.85
2.50	1.75	1.85

Poles	A	B	Poles	A	B
8	5.00	1.50	52	16.00	12.50
10	5.50	2.00	54	16.50	13.00
12	6.00	2.50	56	17.00	13.50
14	6.50	3.00	58	17.50	14.00
16	7.00	3.50	60	18.00	14.50
18	7.50	4.00	62	18.50	15.00
20	8.00	4.50	64	19.00	15.50
22	8.50	5.00	66	19.50	16.00
24	9.00	5.50	68	20.00	16.50
26	9.50	6.00	70	20.50	17.00
28	10.00	6.50	72	21.00	17.50
30	10.50	7.00	74	21.50	18.00
32	11.00	7.50	76	22.00	18.50
34	11.50	8.00	78	22.50	19.00
36	12.00	8.50	80	23.00	19.50
38	12.50	9.00	90	25.50	22.00
40	13.00	9.50	100	28.00	24.50
42	13.50	10.00			
44	14.00	10.50			
46	14.50	11.00			
48	15.00	11.50			
50	15.50	12.00			

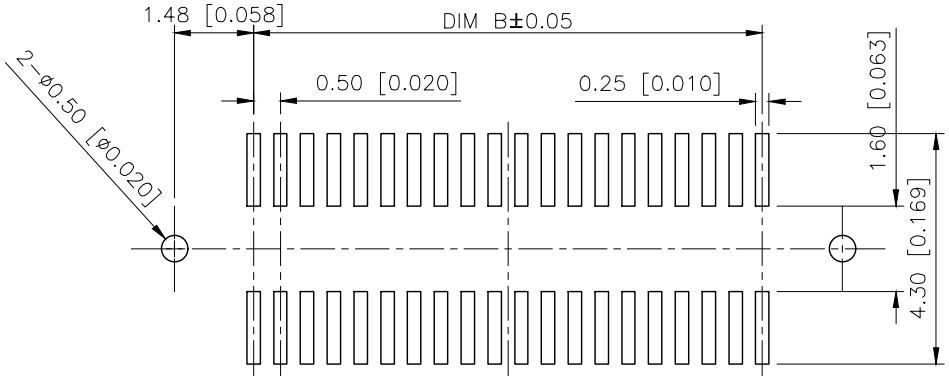

RECOMMENDED PCB LAYOUT
CONNECTOR SIDE

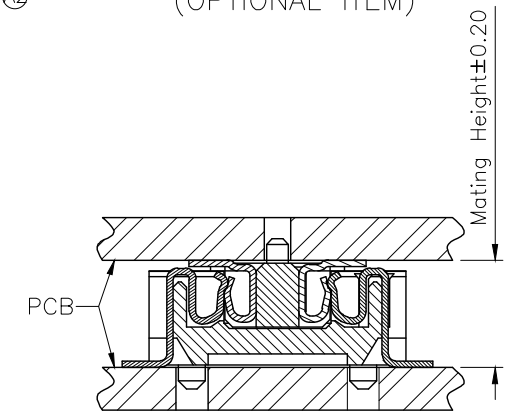

MATING HEIGHT

X0511WVS-10AS-LPV01	LCP	Phosphor Bronze	X0511M
PART NO	Material	Material(Pin)	Suitable XKB Female

AuGLAR	±5°
X.	±0.40
X.x	±0.30
X.xx	±0.20
X.xxx	±0.15
UNSPECIFIED TOLERAuCES	

XKB Connection

DESIGN		VIEW:	MODEL TYPE: 0.5mm BTB Style Connector
CHECKED		UNIT: mm/in	PART NO.: X0511WVS-10AS-LPV01
APPROVED		SIZE: A4	DWG NO.:

XKB INDUSTRIAL PRECISION CO.,LIMITED

SCALE	PAGE	REVISION
N/A	1/1	A2

www.helloxkb.com www.helloxkb.cn www.xk-dg.cn